Title, Note, Block Diagram

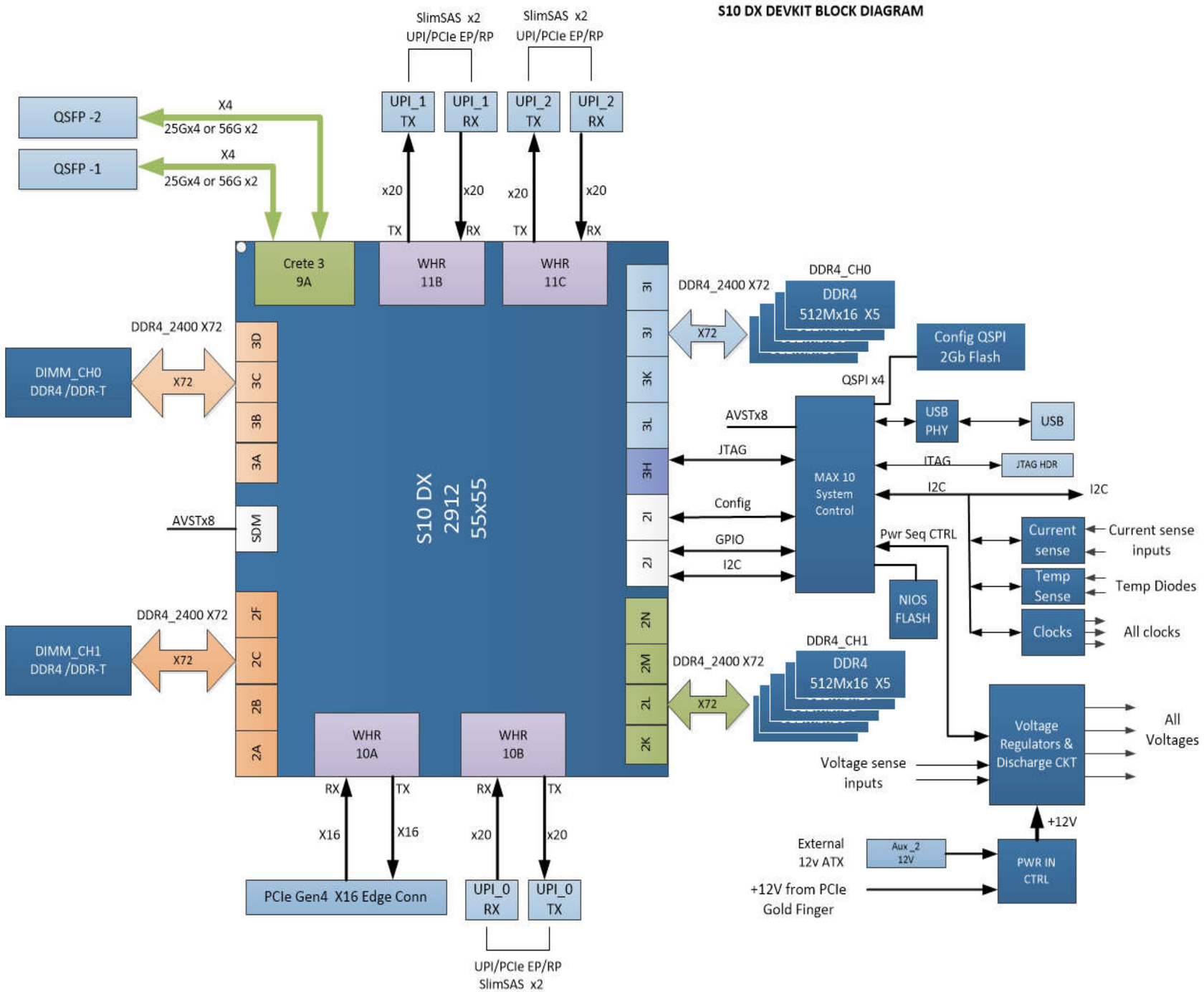

PAGE	DESCRIPTION
1	Title, Note, Block Diagram
2	Diag - Power Tree
3	Diag - Power Sequence
4	Diag - I2C
5	Diag - Clock
6	S10 DX Configuration
7	S10 DX Bank 2A,B,C,I,F
8	S10 DX Bank 2J
9	S10 DX Bank 2K,L,M,N
10	S10 DX Bank 3A,B,C,D
11	S10 DX Bank 3I,J,K
12	S10 DX Bank 3H,L
13	Diag - JTAG
14	S10 DX Xcvr GXER 9A
15	S10 DX Xcvr GXBL 10A,10B
16	S10 DX Xcvr GXBR 11B,11C
17	S10 DX Bank WHR
18	Diag - Reset Tree
19	S10 DX Power
20	S10 DX Ground
21	PCIe Edge Gold Fingers
22	Board System Clocks
23	Max10 System Controller
24	Diag - Board Outline
25	UPI0 LINK
26	UPI1 LINK
27	UPI2 LINK
28	zQSFP Port Controller
29	QSFP1
30	QSFP2
31	User PB, SW, I/Os
32	USB Blaster II
33	Temp Sense & Power Monitor
34	DDR4_CH0_Part1
35	DDR4_CH0_part2
36	DDR4_CH0_part3
37	DDR4_CH0_part4
38	DDR4_CH1_part1
39	DDR4_CH1_part2
40	DDR4_CH1_part3
41	DDR4_CH1_part4
42	DDR4/DDRT Dimms-CH0
43	DDR4/DDRT Dimms-CH1
44	Power-S10_VCCH_GXE
45	Power-S10_VCCH_GXP
46	Power-S10_VCCCLK_GXE
47	Blank
48	Blank
49	12V AUX 2 Hotswap
50	Power- S10 VCCPT_1.8V
51	Power-1.8V
52	S10 Decoupling
53	Fast Power-Down Discharge
54	12V_AUX 1 Hotswap
55	12V_PCIE Hotswap
56	Power - Max10 BMC
57	Power - 5V
58	Power - VCCcore part1
59	Power - VCCcore part2
60	Power - VCCcore part3
61	Power - VCCcore part4
62	Power - VCCERAM
63	Power - 3.3V_REG_INST
64	Power - 2.4V VCCPFUSE_SDM
65	Power - 2V5_DDR4, DDR4_VTT
66	Power-1V2_DDR4_CH11
67	Power-1V2_DDR4_CH00
68	Level Translators 1
69	Level Translators 2

Intel Corporation, 101 Innovation Dr., San Jose CA 95134
Copyright (c) 2016, Intel Corporation. All Rights Reserved.

Title: **Stratix 10 DX FPGA DEVKIT Board**

Size	Document Number	Rev
C	150-0330653-A (K49172-001)	A

Date: Friday, May 24, 2019 Sheet 1 of 69

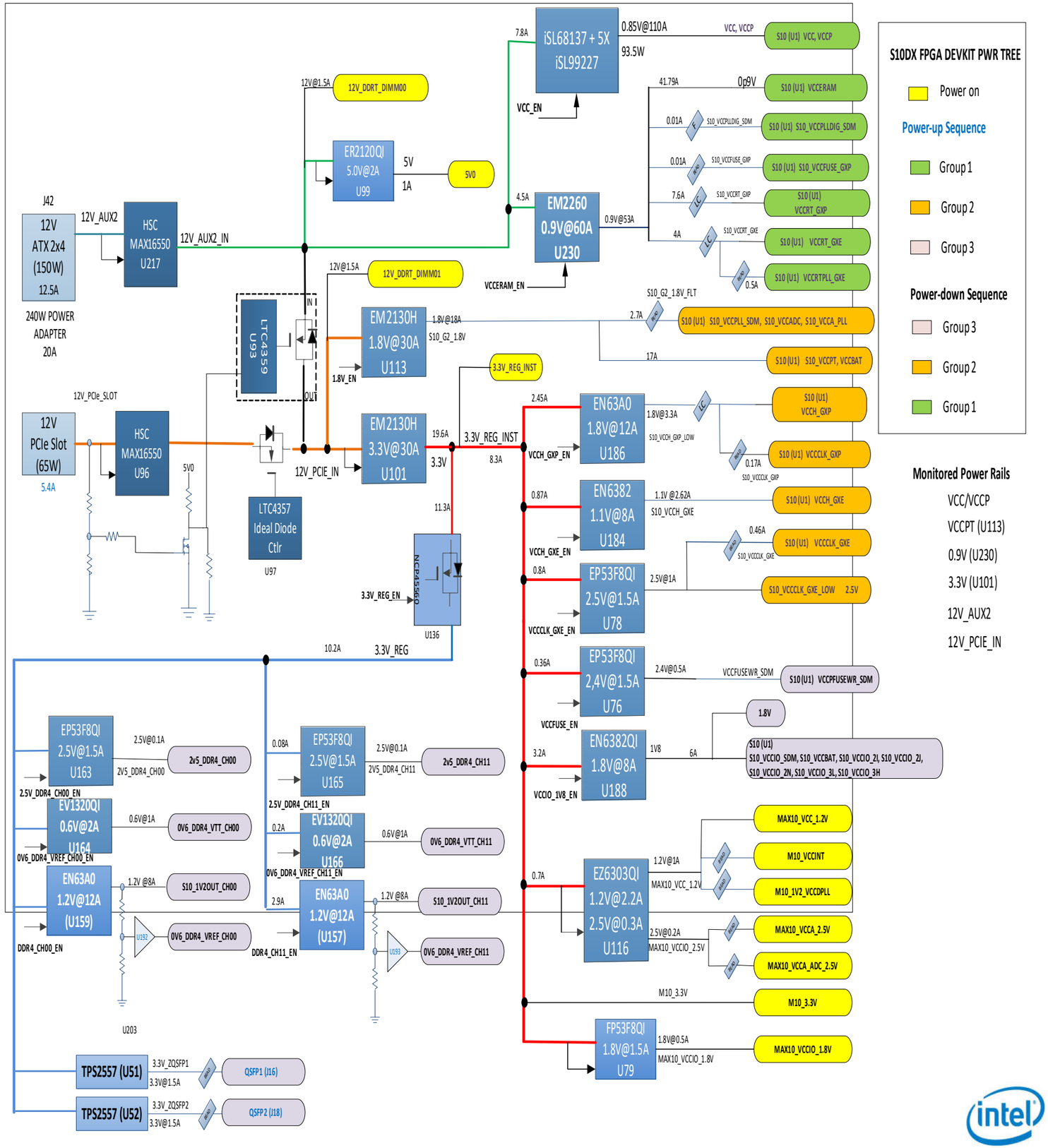

Intel Corporation, 101 Innovation Dr., San Jose CA 95134
Copyright (c) 2016, Intel Corporation. All Rights Reserved.

Title	Stratix 10 DX FPGA DEVKIT Board	
Size: C	Document Number: 150-0330653-A (K49172-001)	Rev: A
Date: Thursday, July 11, 2019	Sheet 2 of 69	

Power Sequence Diagram

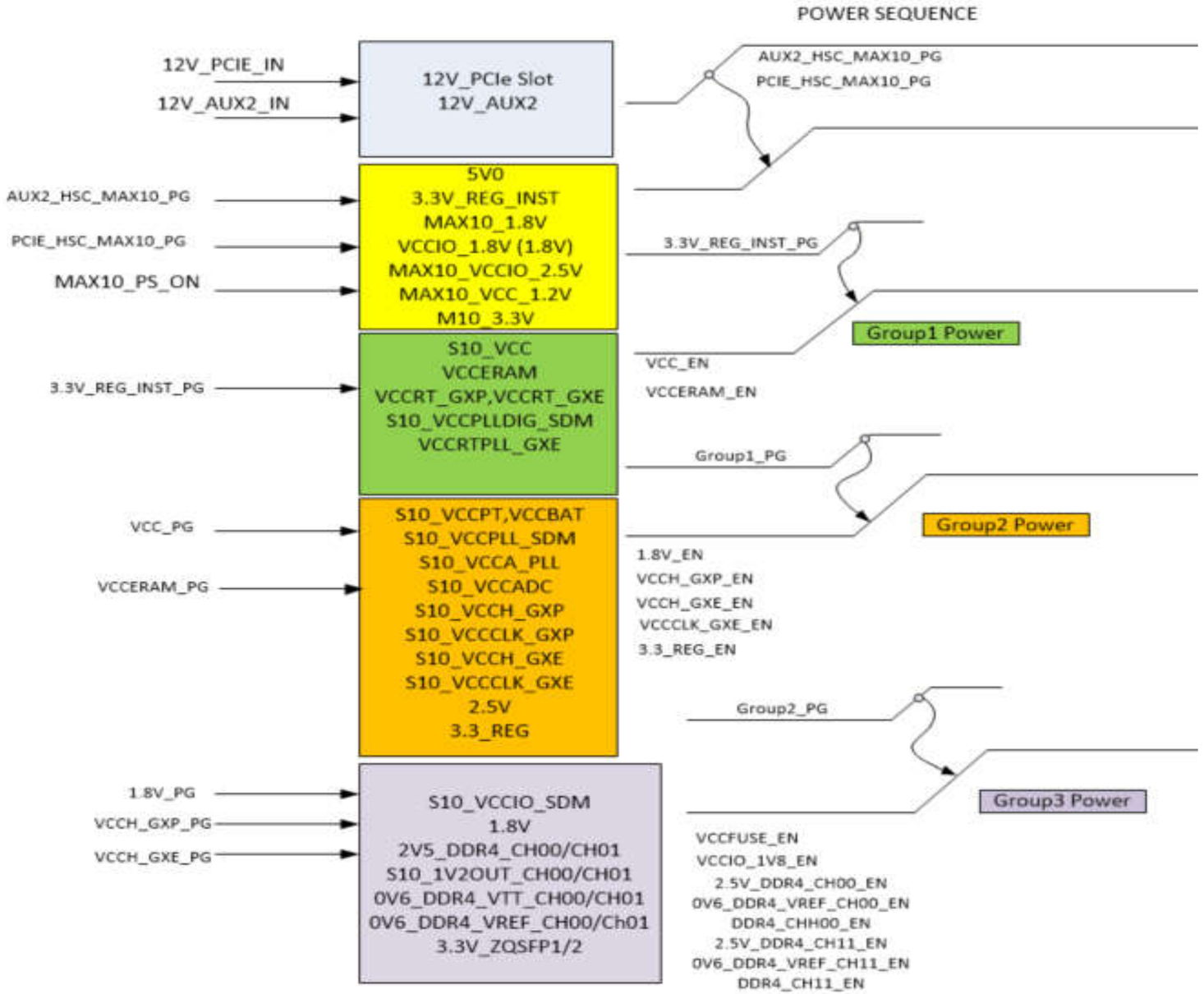

Intel Corporation, 101 Innovation Dr., San Jose CA 95134
Copyright (c) 2016, Intel Corporation. All Rights Reserved.

Title	Stratix 10 DX FPGA DEVKIT Board	
Size: B	Document Number: 150-0330653-A (K49172-001)	Rev: A
Date: Thursday, May 30, 2019	Sheet 3 of 69	

I2C & JTAG DIAGRAM

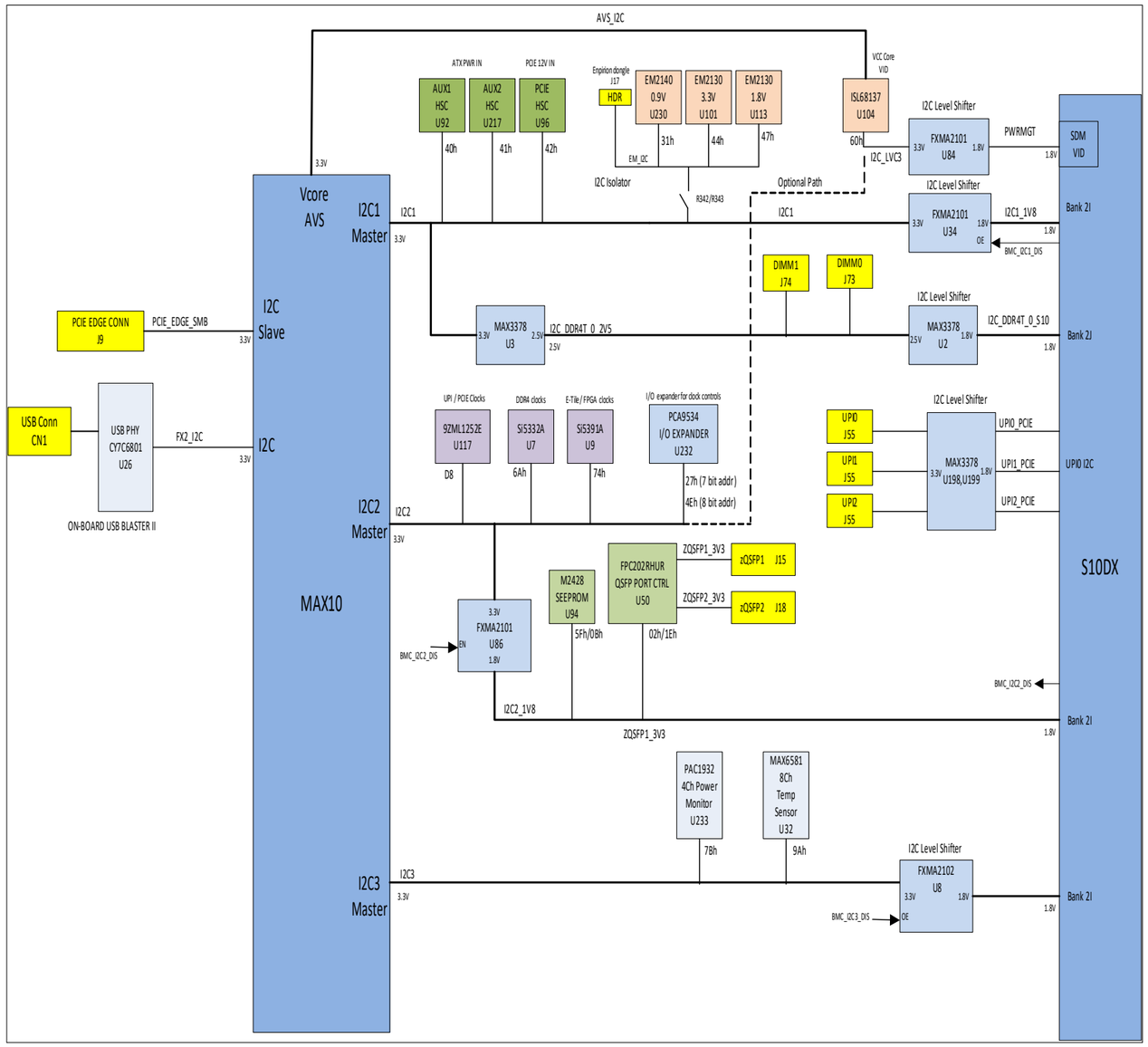

Intel Corporation, 101 Innovation Dr., San Jose CA 95134
Copyright (c) 2016, Intel Corporation. All Rights Reserved.

Title: **Stratix 10 DX FPGA DEVKIT Board**

Size	Document Number	Rev
C	150-0330653-A (K49172-001)	A

Date: Friday, May 24, 2019 Sheet 4 of 69

Clock Diagram

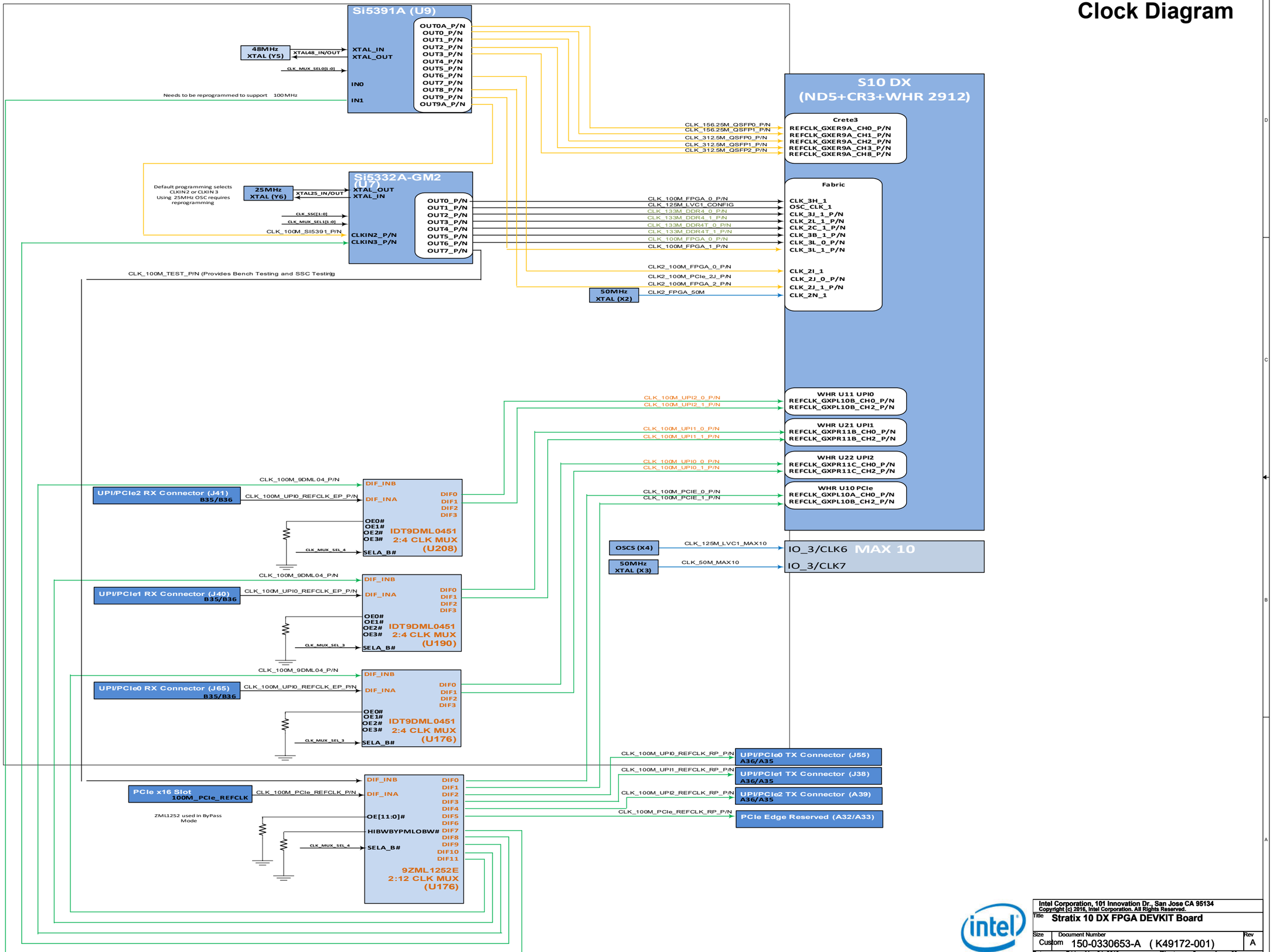

Intel Corporation, 101 Innovation Dr., San Jose CA 95134
Copyright (c) 2016, Intel Corporation. All Rights Reserved.

Title	Stratix 10 DX FPGA DEVKIT Board	
Size: Custom	Document Number: 150-0330653-A (K49172-001)	Rev: A
Date: Friday, May 24, 2019	Sheet 5 of 69	

S10 DX Configuration

Must be close to TCK pin AN22

C289 0402 — 22pF, DNI 10V NP0

1.8V

R1 10.0K, R2 10.0K

U1-1

S10_1V8_TDO	BN30	TDO
S10_1V8_TMS	BM30	TMS
S10_1V8_TCK	BL30	TCK
S10_1V8_TDI	BK29	TDI
FPGA_1V8_nCONFIG	BD29	NCONFIG
FPGA_1V8_nSTATUS	BC27	NSTATUS
CLK_125M_LVC1_CONFIG	BJ28	OSC_CLK_1
FPGA_1V8_INIT_DONE	R5369 0	PWRMGT_SCL BB29
AVST8_DATA2		BB27
AVST8_DATA0		BB28
AVST8_DATA3		BG30
AVST8_DATA1		BF30
AVST8_DATA4		BG28
		BA27
AVST8_READY		BE28
		BC28
		BC26
AVST8_DATA7		BG29
AVST8_VALID		BH28
	PWRMGT_SDA	BJ29
AVST8_DATA5		BF29
AVST8_CLK		BD28
AVST8_DATA6		BE29
FPGA_1V8_CONF_DONE		BK27
		BP31
	R9 2.00K	BM29
		BL29
		BN28
		BM28
		BN31
		BP30
		BN27
		BL27

SDM_IO0,INIT_DONE,PWRMGT_PWM0,PWRMGT_SCL
SDM_IO1,AVSTX8_DATA2,AS_DATA1,SDMMC_CFG_DATA1,NAND_RE_N
SDM_IO2,AVSTX8_DATA0,AS_CLK,SDMMC_CFG_DATA0,NAND_ADQ0
SDM_IO3,AVSTX8_DATA3,AS_DATA2,SDMMC_CFG_DATA2,NAND_ADQ2
SDM_IO4,AVSTX8_DATA1,AS_DATA0,SDMMC_CFG_CMD,NAND_ADQ1
SDM_IO5,INIT_DONE,AS_NCSO0,SDMMC_CFG_CCLK,NAND_WE_N,MSEL0,CONF_DONE
SDM_IO6,AVSTX8_DATA4,AS_DATA3,SDMMC_CFG_DATA3,NAND_ADQ3
SDM_IO7,AS_NCSO2,NAND_ALE,MSEL1
SDM_IO8,AVST_READY,AS_NCSO3,SDMMC_CFG_DATA4,NAND_RB
SDM_IO9,AS_NCSO1,NAND_CLE,MSEL2
SDM_IO10,AVSTX8_DATA7,SDMMC_CFG_DATA7,NAND_ADQ5
SDM_IO11,AVSTX8_VALID,PWRMGT_SDA,NAND_ADQ6
SDM_IO12,PWRMGT_PWM0,PWRMGT_SDA,NAND_WP_N
SDM_IO13,AVSTX8_DATA5,SDMMC_CFG_DATA5,NAND_CE_N
SDM_IO14,AVSTX8_CLK,PWRMGT_SCL,NAND_ADQ7
SDM_IO15,AVSTX8_DATA6,SDMMC_CFG_DATA6,NAND_ADQ4
SDM_IO16,INIT_DONE,CONF_DONE,PWRMGT_SDA
RREF_SDM
VSIGP_0
VSIGN_0
VSIGP_1
VSIGN_1
DNU1
DNU2
DNU3
DNU4

SDM BANK

S10_DX_ND5_F2912D_EXTERNAL

1.8V
R3 10.0K 0402 1%
R4 10.0K 0402 1%

S10_CONFIG

S10_1V8_TCK 23
S10_1V8_TDI 23
S10_1V8_TDO 23
S10_1V8_TMS 23

R11 10.0K 0402 1%

MAX10_VCCIO_1.8V

R152 4.70K, DNI 0402 5%
R168 4.70K, DNI 5% 0402

AVST8_CLK
AVST8_VALID

AVST8_CLK 23
AVST8_VALID 23
AVST8_READY 23
AVST8_DATA[0..7] 23

MSEL0 23
MSEL1 23
MSEL2 23

CLK_125M_LVC1_CONFIG 22

MSEL0_LINE
MSEL1_LINE
MSEL2_LINE

1.8V
R5292 4.70K, R5291 4.70K

3.3V_REG_INST
R5293 4.70K, R5294 4.70K

1.8V
R696 10.0K

1.8V
R5320 10.0K
C832 0.1uF 0402
R6713 0, DNI 0402 5%

Install this resistor to disable U84 for connection of PMBus to I2C2 bus

U84 FXMA2102UMX

PWRMGT_SCL	2	A0	B0 7 — I2C_LVC3_SCL 58
PWRMGT_SDA	3	A1	B1 6 — I2C_LVC3_SDA 58
	5	OE	
	1	VCCA	VCCB 8
	4	GND	

3.3V_REG_INST
C831 0.01uF 0402

23 QSPI_AVST_SEL — QSPI_AVST_SEL

1.8V
R5410 1K
R5411 1K
R5412 1K

R6714 0, DNI — I2C2_SCL 7,22,23,69
R6715 0, DNI — I2C2_SDA 7,22,23,69

Install these two resistors to connect the PMBus to I2C2 bus

SW1 TDA04H0SB1

8	1	MSEL0	
7	2	MSEL1	
6	3	MSEL2	
5	4		

MSEL0
MSEL1
MSEL2

FPGA_1V8_nCONFIG — FPGA_1V8_nCONFIG 23
FPGA_1V8_nSTATUS — FPGA_1V8_nSTATUS 23
FPGA_1V8_INIT_DONE — FPGA_1V8_INIT_DONE 23
FPGA_1V8_CONF_DONE — FPGA_1V8_CONF_DONE 23

SW1 Setting

Config Mode	MSEL2	MSEL1	MSEL0	QSPI AVST SEL	Comments
AVST X8	1(Open)	1(Open)	0(Close)	1(Open)	AVST X8
	0(Close)	0(Close)	1(Open)	0(Close)	
	0(Close)	1(Open)	1(Open)	0(Close)	
JTAG	1(Open)	1(OPen)	1(Open)	x	JTAG

For Active Serial Configuration
Compatible with Micron MT25QU02GCBB3E12-1SIT

3.3V_REG_INST
C875 0.1uF 0402 — C874 0.1uF 0402
R447 10.0K 0402 1% — R6604 10.0K 0402 1%

U66 2Gbit Flash

	B4	VCC	DQ0 D3 — QSPI_M10_DATA0 23
		2.7V ~ 3.6V	DQ1 D2 — QSPI_M10_DATA1 23
		Absmax = 4V	W#/DQ2 C4 — QSPI_M10_DATA2 23
			DQ3 D4 — QSPI_M10_DATA3 23
23 QSPI_M10_CLK	B2	C	
23 QSPI_M10_CS_N	C2	S#	
23 QSPI_M10_RESETN	A4	RESET#/DNU	
	B3	VSS	

DNU1 A2, DNU2 A3, DNU3 A5, DNU4 B1, DNU5 B5, DNU6 C1, DNU7 C3, DNU8 C5, DNU9 D1, DNU10 D5, DNU11 E1, DNU12 E2, DNU13 E3, DNU14 E4, DNU15 E5

MT25QL02GCBB8E12-0SIT
T-PBGA24

2Gb Serial Flash

Intel Corporation, 101 Innovation Dr., San Jose CA 95134
Copyright (c) 2016, Intel Corporation. All Rights Reserved.

Title: Stratix 10 DX FPGA DEVKIT Board

Size	Document Number	Rev
C	150-0330653-A (K49172-001)	A

Date: Friday, May 24, 2019 Sheet 6 of 69

S10 DX Bank 2A, B, C, I, F

IO BANK 2A

U1-2

DDR4_DIMM_CH1_DQ22	BK54	IO,LVDS2A_1N,DQ44
DDR4_DIMM_CH1_DQ20	BL54	IO,LVDS2A_1P,DQ44
DDR4_DIMM_CH1_DQS_N11	BL52	IO,LVDS2A_2N,DQ44
DDR4_DIMM_CH1_DQS_P11	BL51	IO,LVDS2A_2P,DQ44
DDR4_DIMM_CH1_DQ23	BM53	IO,LVDS2A_3N,DQ44
DDR4_DIMM_CH1_DQ21	BN53	IO,LVDS2A_3P,DQ44
DDR4_DIMM_CH1_DQS_N2	BL50	IO,LVDS2A_4N,DQSN44
DDR4_DIMM_CH1_DQS_P2	BM50	IO,LVDS2A_4P,DQS44
DDR4_DIMM_CH1_DQ18	BN52	IO,LVDS2A_5N,DQ44
DDR4_DIMM_CH1_DQ19	BM52	IO,LVDS2A_5P,DQ44
DDR4_DIMM_CH1_DQ16	BL46	IO,LVDS2A_6N,DQ44
DDR4_DIMM_CH1_DQ17	BL47	IO,LVDS2A_6P,DQ44
DDR4_DIMM_CH1_DQ29	BN51	IO,LVDS2A_7N,DQ45
DDR4_DIMM_CH1_DQ28	BP51	IO,LVDS2A_7P,DQ45
DDR4_DIMM_CH1_DQS_N12	BL49	IO,LVDS2A_8N,DQ45
DDR4_DIMM_CH1_DQS_P12	BM49	IO,LVDS2A_8P,DQ45
DDR4_DIMM_CH1_DQ30	BM48	IO,LVDS2A_9N,DQ45
DDR4_DIMM_CH1_DQ31	BN48	IO,LVDS2A_9P,DQ45
DDR4_DIMM_CH1_DQS_N3	BJ45	IO,PLL_2A_CLKOUT1N,LVDS2A_10N,DQSN45
DDR4_DIMM_CH1_DQS_P3	BH45	IO,PLL_2A_CLKOUT1P,PLL_2A_CLKOUT1,PLL_2A_FB1,LVDS2A_10P,DQS45
DDR4_DIMM_CH1_DQ25	BM45	IO,LVDS2A_11N,DQ45
DDR4_DIMM_CH1_DQ27	BL45	IO,RZQ_2A,LVDS2A_11P,DQ45
DDR4_DIMM_CH1_DQ24	BG45	IO,CLK_2A_1N,LVDS2A_12N,DQ45
DDR4_DIMM_CH1_DQ26	BF45	IO,CLK_2A_1P,LVDS2A_12P,DQ45
DDR4_DIMM_CH1_DQ44	BK43	IO,CLK_2A_0N,LVDS2A_13N,DQ46
DDR4_DIMM_CH1_DQ45	BJ43	IO,CLK_2A_0P,LVDS2A_13P,DQ46
DDR4_DIMM_CH1_DQS_N14	BP50	IO,LVDS2A_14N,DQ46
DDR4_DIMM_CH1_DQS_P14	BN50	IO,LVDS2A_14P,DQ46
DDR4_DIMM_CH1_DQ47	BG43	IO,PLL_2A_CLKOUT0N,LVDS2A_15N,DQ46
DDR4_DIMM_CH1_DQ46	BH43	IO,PLL_2A_CLKOUT0P,PLL_2A_CLKOUT0,PLL_2A_FB0,LVDS2A_15P,DQ46
DDR4_DIMM_CH1_DQS_N5	BN47	IO,LVDS2A_16N,DQSN46
DDR4_DIMM_CH1_DQS_P5	BM47	IO,LVDS2A_16P,DQS46
DDR4_DIMM_CH1_DQ43	BF42	IO,LVDS2A_17N,DQ46
DDR4_DIMM_CH1_DQ42	BF41	IO,LVDS2A_17P,DQ46
DDR4_DIMM_CH1_DQ40	BP48	IO,LVDS2A_18N,DQ46
DDR4_DIMM_CH1_DQ41	BP49	IO,LVDS2A_18P,DQ46
DDR4_DIMM_CH1_DQ14	BN46	IO,LVDS2A_19N,DQ47
DDR4_DIMM_CH1_DQ15	BP46	IO,LVDS2A_19P,DQ47
DDR4_DIMM_CH1_DQS_N10	BE43	IO,LVDS2A_20N,DQ47
DDR4_DIMM_CH1_DQS_P10	BE42	IO,LVDS2A_20P,DQ47
DDR4_DIMM_CH1_DQ13	BL44	IO,LVDS2A_21N,DQ47
DDR4_DIMM_CH1_DQ12	BM44	IO,LVDS2A_21P,DQ47
DDR4_DIMM_CH1_DQS_N1	BF44	IO,LVDS2A_22N,DQSN47
DDR4_DIMM_CH1_DQS_P1	BG44	IO,LVDS2A_22P,DQS47
DDR4_DIMM_CH1_DQ11	BN45	IO,LVDS2A_23N,DQ47
DDR4_DIMM_CH1_DQ10	BP45	IO,LVDS2A_23P,DQ47
DDR4_DIMM_CH1_DQ9	BJ44	IO,LVDS2A_24N,DQ47
DDR4_DIMM_CH1_DQ8	BK44	IO,LVDS2A_24P,DQ47

DQSn/P for x4 — 1.2V

DQSn/P for x4

DQSn/P for x4

DQSn/P for x4

S10_DX_ND5_F2912D_EXTERNAL

IO BANK 2C

U1-4

1.2V

		IO,LVDS2C_1N,DQ36
BC32	DDR4_DIMM_CH1_CK_N1	IO,LVDS2C_1P,DQ36
BB32	DDR4_DIMM_CH1_CK_P1	IO,LVDS2C_2N,DQ36
BB33		IO,LVDS2C_2P,DQ36
BE33		IO,LVDS2C_3N,DQ36
BA32	DDR4_DIMM_CH1_ALERT_N	IO,LVDS2C_3P,DQ36
BA31		IO,LVDS2C_4N,DQSN36
BC33		IO,LVDS2C_4P,DQS36
BB33		IO,LVDS2C_5N,DQ36
BA34		IO,LVDS2C_5P,DQ36
BB34	DDR4_DIMM_CH1_C2	IO,LVDS2C_6N,DQ36
BE34	DDR4_DIMM_CH1_CS_N3	IO,LVDS2C_6P,DQ36
BD34	DDR4_DIMM_CH1_CS_N2	IO,LVDS2C_7N,DQ37
BG33	DDR4_DIMM_CH1_BG1	IO,LVDS2C_7P,DQ37
BH33	DDR4_DIMM_CH1_BA1	IO,LVDS2C_8N,DQ37
BH36	DDR4_DIMM_CH1_BA0	IO,LVDS2C_8P,DQ37
BH35	DDR4_DIMM_CH1_A17	IO,LVDS2C_9N,DQ37
BJ35	DDR4_DIMM_CH1_A16	IO,LVDS2C_9P,DQ37
BJ34	DDR4_DIMM_CH1_A15	IO,PLL_2C_CLKOUT1N,LVDS2C_10N,DQSN37
BG34	DDR4_DIMM_CH1_A14	IO,PLL_2C_CLKOUT1P,PLL_2C_CLKOUT1,PLL_2C_FB1,LVDS2C_10P,DQS37
BF34	DDR4_DIMM_CH1_A13	IO,LVDS2C_11N,DQ37
BG35	DDR4_DIMM_CH1_A12	IO,RZQ_2C,LVDS2C_11P,DQ37
BF35	RZQ_2C	IO,CLK_2C_1N,LVDS2C_12N,DQ37
BJ36	CLK_133M_DIMM_0_N	IO,CLK_2C_1P,LVDS2C_12P,DQ37
BH37	CLK_133M_DIMM_0_P	IO,CLK_2C_0N,LVDS2C_13N,DQ38
BM34	DDR4_DIMM_CH1_A11	IO,CLK_2C_0P,LVDS2C_13P,DQ38
BL34	DDR4_DIMM_CH1_A10	IO,LVDS2C_14N,DQ38
BL37	DDR4_DIMM_CH1_A9	IO,LVDS2C_14P,DQ38
BK37	DDR4_DIMM_CH1_A8	IO,PLL_2C_CLKOUT0N,LVDS2C_15N,DQ38
BK33	DDR4_DIMM_CH1_A7	IO,PLL_2C_CLKOUT0P,PLL_2C_CLKOUT0,PLL_2C_FB0,LVDS2C_15P,DQ38
BJ33	DDR4_DIMM_CH1_A6	IO,LVDS2C_16N,DQSN38
BL36	DDR4_DIMM_CH1_A5	IO,LVDS2C_16P,DQS38
BK36	DDR4_DIMM_CH1_A4	IO,LVDS2C_17N,DQ38
BK34	DDR4_DIMM_CH1_A3	IO,LVDS2C_17P,DQ38
BL35	DDR4_DIMM_CH1_A2	IO,LVDS2C_18N,DQ38
BJ38	DDR4_DIMM_CH1_A1	IO,LVDS2C_18P,DQ38
BK38	DDR4_DIMM_CH1_A0	IO,LVDS2C_19N,DQ39
BM35	DDR4_DIMM_CH1_PAR	IO,LVDS2C_19P,DQ39
BN35	DDR4_DIMM_CH1_CS_N1	IO,LVDS2C_20N,DQ39
BM37	DDR4_DIMM_CH1_CK_N0	IO,LVDS2C_20P,DQ39
BN37	DDR4_DIMM_CH1_CK_P0	IO,LVDS2C_21N,DQ39
BP34	DDR4_DIMM_CH1_CKE1	IO,LVDS2C_21P,DQ39
BP35	DDR4_DIMM_CH1_CKE0	IO,LVDS2C_22N,DQSN39
BN36	DDR4_DIMM_CH1_ODT1	IO,LVDS2C_22P,DQS39
BP36	DDR4_DIMM_CH1_ODT0	IO,LVDS2C_23N,DQ39
BM38	DDR4_DIMM_CH1_ACT_N	IO,LVDS2C_23P,DQ39
BN38	DDR4_DIMM_CH1_CS_N0	IO,LVDS2C_24N,DQ39
BP38	DDR4_DIMM_CH1_RESET_N	IO,LVDS2C_24P,DQ39
BP39	DDR4_DIMM_CH1_BG1	

R47 240 1% R0201

S10_DX_ND5_F2912D_EXTERNAL

IO BANK 2B

U1-3

DDR4_DIMM_CH1_DQ63	AY34	IO,LVDS2B_1N,DQ40
DDR4_DIMM_CH1_DQ62	AW34	IO,LVDS2B_1P,DQ40
DDR4_DIMM_CH1_DQS_N16	BB35	IO,LVDS2B_2N,DQ40
DDR4_DIMM_CH1_DQS_P16	BA35	IO,LVDS2B_2P,DQ40
DDR4_DIMM_CH1_DQ60	AW35	IO,LVDS2B_3N,DQ40
DDR4_DIMM_CH1_DQ61	AW36	IO,LVDS2B_3P,DQ40
DDR4_DIMM_CH1_DQS_N7	BE36	IO,LVDS2B_4N,DQSN40
DDR4_DIMM_CH1_DQS_P7	BD36	IO,LVDS2B_4P,DQS40
DDR4_DIMM_CH1_DQ56	AY36	IO,LVDS2B_5N,DQ40
DDR4_DIMM_CH1_DQ58	BA36	IO,LVDS2B_5P,DQ40
DDR4_DIMM_CH1_DQ59	BC35	IO,LVDS2B_6N,DQ40
DDR4_DIMM_CH1_DQ57	BC36	IO,LVDS2B_6P,DQ40
DDR4_DIMM_CH1_DQ53	BH42	IO,LVDS2B_7N,DQ41
DDR4_DIMM_CH1_DQ52	BG42	IO,LVDS2B_7P,DQ41
DDR4_DIMM_CH1_DQS_N15	BE37	IO,LVDS2B_8N,DQ41
DDR4_DIMM_CH1_DQS_P15	BF37	IO,LVDS2B_8P,DQ41
DDR4_DIMM_CH1_DQ54	BG40	IO,LVDS2B_9N,DQ41
DDR4_DIMM_CH1_DQ55	BG39	IO,LVDS2B_9P,DQ41
DDR4_DIMM_CH1_DQS_N6	BH38	IO,PLL_2B_CLKOUT1N,LVDS2B_10N,DQSN41
DDR4_DIMM_CH1_DQS_P6	BG38	IO,PLL_2B_CLKOUT1P,PLL_2B_CLKOUT1,PLL_2B_FB1,LVDS2B_10P,DQS41
DDR4_DIMM_CH1_DQ48	BF40	IO,LVDS2B_11N,DQ41
DDR4_DIMM_CH1_DQ49	BF39	IO,RZQ_2B,LVDS2B_11P,DQ41
DDR4_DIMM_CH1_DQ51	BF36	IO,CLK_2B_1N,LVDS2B_12N,DQ41
DDR4_DIMM_CH1_DQ50	BG37	IO,CLK_2B_1P,LVDS2B_12P,DQ41
DDR4_DIMM_CH1_DQ5	BJ41	IO,CLK_2B_0N,LVDS2B_13N,DQ42
DDR4_DIMM_CH1_DQ4	BH41	IO,CLK_2B_0P,LVDS2B_13P,DQ42
DDR4_DIMM_CH1_DQS_N9	BM39	IO,LVDS2B_14N,DQ42
DDR4_DIMM_CH1_DQS_P9	BL39	IO,LVDS2B_14P,DQ42
DDR4_DIMM_CH1_DQ7	BK41	IO,PLL_2B_CLKOUT0N,LVDS2B_15N,DQ42
DDR4_DIMM_CH1_DQ6	BL41	IO,PLL_2B_CLKOUT0P,PLL_2B_CLKOUT0,PLL_2B_FB0,LVDS2B_15P,DQ42
DDR4_DIMM_CH1_DQS_N0	BJ40	IO,LVDS2B_16N,DQSN42
DDR4_DIMM_CH1_DQS_P0	BH40	IO,LVDS2B_16P,DQS42
DDR4_DIMM_CH1_DQ2	BL42	IO,LVDS2B_17N,DQ42
DDR4_DIMM_CH1_DQ3	BK42	IO,LVDS2B_17P,DQ42
DDR4_DIMM_CH1_DQ0	BJ39	IO,LVDS2B_18N,DQ42
DDR4_DIMM_CH1_DQ1	BK39	IO,LVDS2B_18P,DQ42
DDR4_DIMM_CH1_DQ36	BM42	IO,LVDS2B_19N,DQ43
DDR4_DIMM_CH1_DQ37	BN42	IO,LVDS2B_19P,DQ43
DDR4_DIMM_CH1_DQS_N13	BL40	IO,LVDS2B_20N,DQ43
DDR4_DIMM_CH1_DQS_P13	BM40	IO,LVDS2B_20P,DQ43
DDR4_DIMM_CH1_DQ39	BP43	IO,LVDS2B_21N,DQ43
DDR4_DIMM_CH1_DQ38	BP44	IO,LVDS2B_21P,DQ43
DDR4_DIMM_CH1_DQS_N4	BN41	IO,LVDS2B_22N,DQSN43
DDR4_DIMM_CH1_DQS_P4	BP41	IO,LVDS2B_22P,DQS43
DDR4_DIMM_CH1_DQ34	BN43	IO,LVDS2B_23N,DQ43
DDR4_DIMM_CH1_DQ35	BM43	IO,LVDS2B_23P,DQ43
DDR4_DIMM_CH1_DQ33	BN40	IO,LVDS2B_24N,DQ43
DDR4_DIMM_CH1_DQ32	BP40	IO,LVDS2B_24P,DQ43

DQSn/P for x4 — 1.2V

DQSn/P for x4

DQSn/P for x4

DQSn/P for x4

S10_DX_ND5_F2912D_EXTERNAL

IO BANK 2I

U1-5

		IO,LVDS2I_1N,DQ20
E32		IO,LVDS2I_1P,DQ20
E33	TEST1	IO,LVDS2I_2N,DQ20
A32	TEST2	IO,LVDS2I_2P,DQ20
B32	TEST3	IO,LVDS2I_3N,DQ20
F32	TEST4	IO,LVDS2I_3P,DQ20
G33	R382 0 I2C3_1V8_SCL	IO,LVDS2I_4N,DQSN20
C33	R383 0 I2C3_1V8_SDA	IO,LVDS2I_4P,DQS20
D33	ZQSFP_1V8_PORT_EN	IO,LVDS2I_5N,DQ20
H32	ZQSFP_1V8_PORT_INT_N	IO,LVDS2I_5P,DQ20
G32	R307 0 I2C1_1V8_SDA	IO,LVDS2I_6N,DQ20
C32	R308 0 I2C1_1V8_SCL	IO,LVDS2I_6P,DQ20
B33	R356 0 I2C2_1V8_SDA	IO,LVDS2I_7N,DQ21
K32	R357 0 I2C2_1V8_SCL	IO,LVDS2I_7P,DQ21
K33	R396 0 M10_DATA0_1V8	IO,LVDS2I_8N,DQ21
L31	R397 0 M10_DATA1_1V8	IO,LVDS2I_8P,DQ21
K31	R398 0 M10_DATA2_1V8	IO,LVDS2I_9N,DQ21
N32	R399 0 M10_DATA3_1V8	IO,LVDS2I_9P,DQ21
N31	R400 0 M10_CLK_1V8	IO,PLL_2I_CLKOUT1N,LVDS2I_10N,DQSN21
L32	R402 0 M10_SSN_1V8	IO,PLL_2I_CLKOUT1P,PLL_2I_CLKOUT1,PLL_2I_FB1,LVDS2I_10P,DQS21
M32	R404 0 M10_GPIO0_1V8	IO,LVDS2I_11N,DQ21
P31	R405 0 M10_GPIO1_1V8	IO,RZQ_2I,LVDS2I_11P,DQ21
R31	BMC_I2C1_DISABLE	IO,CLK_2I_1P,LVDS2I_12P,DQ21
H33	CLK2_100M_FPGA_2I_P	IO,CLK_2I_1N,LVDS2I_12N,DQ21
J33	CLK2_100M_FPGA_2I_N	

S10_DX_ND5_F2912D_EXTERNAL

IO BANK 2F

		IO,CLK_2F_0N,LVDS2F_13N,DQ34
BC31	DDR4_DIMM_CH1_DQ71	IO,CLK_2F_0P,LVDS2F_13P,DQ34
BC30	DDR4_DIMM_CH1_DQ69	IO,LVDS2F_14N,DQ34
BD31	DDR4_DIMM_CH1_DQS_N17	IO,LVDS2F_14P,DQ34
BD30	DDR4_DIMM_CH1_DQS_P17	IO,PLL_2F_CLKOUT0N,LVDS2F_15N,DQ34
BA30	DDR4_DIMM_CH1_DQ68	IO,PLL_2F_CLKOUT0P,PLL_2F_CLKOUT0,PLL_2F_FB0,LVDS2F_15P,DQ34
BB30	DDR4_DIMM_CH1_DQ70	IO,LVDS2F_16N,DQSN34
BF32	DDR4_DIMM_CH1_DQS_N8	IO,LVDS2F_16P,DQS34
BG32	DDR4_DIMM_CH1_DQS_P8	IO,LVDS2F_17N,DQ34
BA29	DDR4_DIMM_CH1_DQ64	IO,LVDS2F_17P,DQ34
AY29	DDR4_DIMM_CH1_DQ66	IO,LVDS2F_18N,DQ34
BF31	DDR4_DIMM_CH1_DQ67	IO,LVDS2F_18P,DQ34
BE31	DDR4_DIMM_CH1_DQ65	IO,LVDS2F_19N,DQ35
BH32		IO,LVDS2F_19P,DQ35
BH31		IO,LVDS2F_20N,DQ35
BK32		IO,LVDS2F_20P,DQ35
BL31		IO,LVDS2F_21N,DQ35
BL32		IO,LVDS2F_21P,DQ35
BM33		IO,LVDS2F_22N,DQSN35
BJ31		IO,LVDS2F_22P,DQS35
BK31		IO,LVDS2F_23N,DQ35
BH30		IO,LVDS2F_23P,DQ35
BJ30		IO,LVDS2F_24N,DQ35
BN33		IO,LVDS2F_24P,DQ35
BP33		

DQSn/P for x4

S10_DX_ND5_F2912D_EXTERNAL

DDR4 DIMM CH1 IF

43	DDR4_DIMM_CH1_RESET_N
43	DDR4_DIMM_CH1_ACT_N
43	DDR4_DIMM_CH1_PAR
43	DDR4_DIMM_CH1_ALERT_N
43	DDR4_DIMM_CH1_C2
43	DDR4_DIMM_CH1_ODT[1:0]
43	DDR4_DIMM_CH1_BA[1:0]
43	DDR4_DIMM_CH1_BG[1:0]
43	DDR4_DIMM_CH1_CS_N[3:0]
43	DDR4_DIMM_CH1_CK_P[1:0]
43	DDR4_DIMM_CH1_CK_N[1:0]
43	DDR4_DIMM_CH1_CKE[1:0]
43	DDR4_DIMM_CH1_DQS_P[17:0]
43	DDR4_DIMM_CH1_DQS_N[17:0]
43	DDR4_DIMM_CH1_A[17:0]
43	DDR4_DIMM_CH1_DQ[71:0]

I2C 3V3

I2C2_SCL	I2C2_SCL	6,22,23,69
I2C2_SDA	I2C2_SDA	6,22,23,69
I2C3_SCL	I2C3_SCL	23,33
I2C3_SDA	I2C3_SDA	23,33

I2C 1V8

I2C1_1V8_SCL	I2C1_1V8_SCL	68
I2C1_1V8_SDA	I2C1_1V8_SDA	68
I2C2_1V8_SCL	I2C2_1V8_SCL	28
I2C2_1V8_SDA	I2C2_1V8_SDA	28
ZQSFP_1V8_PORT_INT_N	ZQSFP_1V8_PORT_INT_N	28
ZQSFP_1V8_PORT_EN	ZQSFP_1V8_PORT_EN	28

CLOCK

R6350 100 — CLK_133M_DIMM_0_P 22, CLK_133M_DIMM_0_N 22

R6476 100 — CLK2_100M_FPGA_2I_P 22, CLK2_100M_FPGA_2I_N 22

BMC_I2C1_DISABLE — BMC_I2C1_DISABLE 68

3.3V_REG_INST

J96 TSM-103-01-L-SV

J95 TSM-103-01-L-SV

Please J95 and J96 side-by-side on the solder side of board

1.8V

R5298 4.70K, R5304 4.70K, R5321 10.0K

R5302 4.70K, R5303 4.70K

U86 FXMA2102UMX

I2C2_1V8_SCL, I2C2_1V8_SDA — I2C2_SCL, I2C2_SDA

C851 0.1uF 0402

C850 0.01uF 0402

8 BMC_I2C2_DISABLE

R6592 100 1% 0402

R6593 10.0K 0402 1%

Q64 SI2302CDS-T1-GE3 SOT23

When BMC_I2C2_DISABLE = 1, MAX10 BMC is blocked from accessing EEPROM and QSFP Port Controller over I2C2 bus. This pin should be assigned as open drain output.

M10_DATA0_1V8 68
M10_DATA1_1V8 68
M10_DATA2_1V8 68
M10_DATA3_1V8 68
M10_CLK_1V8 68
M10_SSN_1V8 68
M10_GPIO0_1V8 68
M10_GPIO1_1V8 68

1.8V

R5384 4.70K, R5419 4.70K

I2C3_1V8_SCL, I2C3_1V8_SDA

U8 FXMA2102UMX

I2C3_OE

R6436 10.0K

C3109 0.01uF 0402

M10_3.3V

C3110 0.1uF 0402

3.3V_REG_INST

R5383 4.70K, R5420 4.70K

I2C3_SCL, I2C3_SDA

8 BMC_I2C3_DISABLE

R6602 0402 100 1%

R6603 10.0K 0402 1%

Q65 SI2302CDS-T1-GE3 SOT23

VGS(th) = 0.6V / 1V /1.5V

128-Kbit Serail EEPROM

1.8V

R498 10.0K 0402 1%, R499 10.0K 0402 1%, R500 10.0K 0402 1%

R6022 10.0K,DNI 0402 1%, R524 10.0K,DNI 0402 1%, R525 10.0K,DNI 0402 1%

U94 M24128-BRMN6TP SO8

E0, E1, E2, VCC, WC_N, SCL, SDA, GND

R6023 10.0K 0402 1%

I2C2_1V8_SCL, I2C2_1V8_SDA — R301 0, R290 0

C1193 0.1uF 0402 25V X7R

I2C 7-bit Addr =0x50 - 0x5F

I2C 8-bit Addr =0xA0 - 0xBF

Intel Corporation, 101 Innovation Dr., San Jose CA 95134
Copyright (c) 2016, Intel Corporation. All Rights Reserved.

Title: Stratix 10 DX FPGA DEVKIT Board

Size	Document Number	Rev
C	150-0330653-A (K49172-001)	A

Date: Friday, May 24, 2019 Sheet 7 of 69

S10 DX Bank 2J

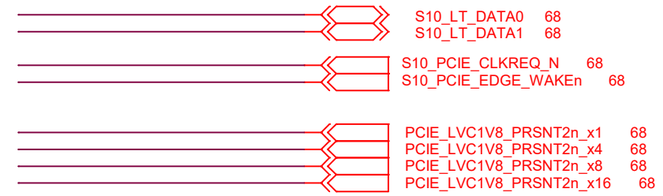

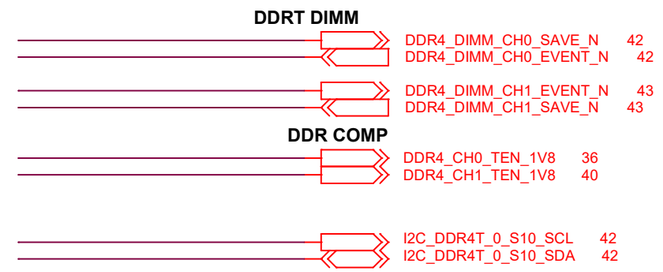

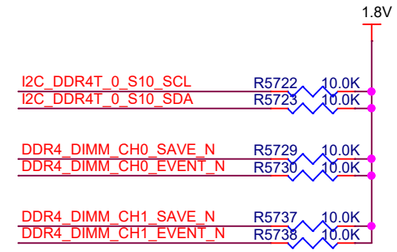

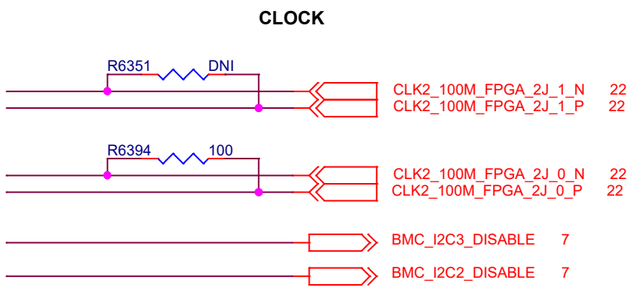

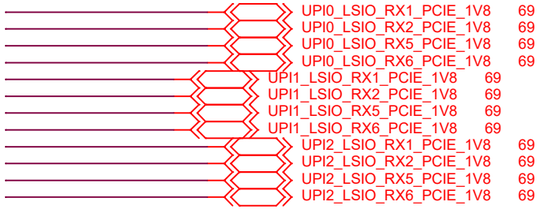

Intel Corporation, 101 Innovation Dr., San Jose CA 95134
Copyright (c) 2016, Intel Corporation. All Rights Reserved.

Title	Stratix 10 DX FPGA DEVKIT Board	
Size: B	Document Number: 150-0330653-A (K49172-001)	Rev: A
Date: Friday, May 31, 2019	Sheet 8 of 69	

S10 DX Bank 2K, L, M, N

Clock

1.8V
R293 10.0K
X2 (EN, VCC, GND, OUT) 50MHz ECS-3518-500-B-xx
C312 2.2uF 0603
C409 0.1uF 0402
CLKIN_50 R294 22.0 CLK2_FPGA_50M

R6353 100
22 CLK_133M_DDR4_1_P
22 CLK_133M_DDR4_1_N

R212 240 1% R0201
CLK_133M_DDR4_1_N
CLK_133M_DDR4_1_P

R22 240 1% R0201
RZQ_2F

U1-8 — IO BANK 2L (1.2V)

S10_DX_ND5_F2912D_EXTERNAL

Pin	Net
M43	DDR4_CH1_DQ50
N43	DDR4_CH1_DQ48
T42	DDR4_CH1_DQ51
R42	DDR4_CH1_DQ49
M44	DDR4_CH1_DQ52
L44	DDR4_CH1_DQ55
N42	DDR4_CH1_DQS6N
M42	DDR4_CH1_DQS6P
L45	DDR4_CH1_DQ54
K46	DDR4_CH1_DQ53
P43	DDR4_CH1_DM6
R43	
G47	DDR4_CH1_BG0
H47	DDR4_CH1_BA1
K43	DDR4_CH1_BA0
K44	
H48	DDR4_CH1_A16
J48	DDR4_CH1_A15
H46	DDR4_CH1_A14
J46	DDR4_CH1_A13
G49	DDR4_CH1_A12
G48	RZQ_2L
H45	
J45	
C48	DDR4_CH1_A11
B48	DDR4_CH1_A10
D48	DDR4_CH1_A9
E48	DDR4_CH1_A8
D49	DDR4_CH1_A7
D50	DDR4_CH1_A6
F49	DDR4_CH1_A5
E49	DDR4_CH1_A4
F50	DDR4_CH1_A3
G50	DDR4_CH1_A2
B49	DDR4_CH1_A1
A49	DDR4_CH1_A0
A50	DDR4_CH1_PAR
A51	DDR4_CH1_ALERTN
C50	DDR4_CH1_CKN
B50	DDR4_CH1_CKP
B52	
C52	DDR4_CH1_CKE
C51	
D51	DDR4_CH1_ODT
B53	DDR4_CH1_ACTn
C53	DDR4_CH1_CSn
E51	DDR4_CH1_RESETn
F51	DDR4_CH1_BG1

IO,LVDS2L_1N,DQ8
IO,LVDS2L_1P,DQ8
IO,LVDS2L_2N,DQ8
IO,LVDS2L_2P,DQ8
IO,LVDS2L_3N,DQ8
IO,LVDS2L_3P,DQ8
IO,LVDS2L_4N,DQSN8
IO,LVDS2L_4P,DQS8
IO,LVDS2L_5N,DQ8
IO,LVDS2L_5P,DQ8
IO,LVDS2L_6N,DQ8
IO,LVDS2L_6P,DQ8
IO,LVDS2L_7N,DQ9
IO,LVDS2L_7P,DQ9
IO,LVDS2L_8N,DQ9
IO,LVDS2L_8P,DQ9
IO,LVDS2L_9N,DQ9
IO,LVDS2L_9P,DQ9
IO,PLL_2L_CLKOUT1N,LVDS2L_10N,DQSN9
IO,PLL_2L_CLKOUT1P,PLL_2L_CLKOUT1,PLL_2L_FB1,LVDS2L_10P,DQS9
IO,LVDS2L_11N,DQ9
IO,RZQ_2L,LVDS2L_11P,DQ9
IO,CLK_2L_1N,LVDS2L_12N,DQ9
IO,CLK_2L_1P,LVDS2L_12P,DQ9
IO,CLK_2L_0N,LVDS2L_13N,DQ10
IO,CLK_2L_0P,LVDS2L_13P,DQ10
IO,LVDS2L_14N,DQ10
IO,LVDS2L_14P,DQ10
IO,PLL_2L_CLKOUT0N,LVDS2L_15N,DQ10
IO,PLL_2L_CLKOUT0P,PLL_2L_CLKOUT0,PLL_2L_FB0,LVDS2L_15P,DQ10
IO,LVDS2L_16N,DQSN10
IO,LVDS2L_16P,DQS10
IO,LVDS2L_17N,DQ10
IO,LVDS2L_17P,DQ10
IO,LVDS2L_18N,DQ10
IO,LVDS2L_18P,DQ10
IO,LVDS2L_19N,DQ11
IO,LVDS2L_19P,DQ11
IO,LVDS2L_20N,DQ11
IO,LVDS2L_20P,DQ11
IO,LVDS2L_21N,DQ11
IO,LVDS2L_21P,DQ11
IO,LVDS2L_22N,DQSN11
IO,LVDS2L_22P,DQS11
IO,LVDS2L_23N,DQ11
IO,LVDS2L_23P,DQ11
IO,LVDS2L_24N,DQ11
IO,LVDS2L_24P,DQ11

U1-10 — IO BANK 2N

S10_DX_ND5_F2912D_EXTERNAL

Pin	Net
P39	UPI2_LSIO_RX6
R39	UPI2_LSIO_RX5
N37	UPI2_LSIO_RX4
M37	UPI2_LSIO_RX3
R36	UPI2_LSIO_RX2
R37	UPI2_LSIO_RX1
M38	UPI2_LSIO_TX6
N38	UPI2_LSIO_TX5
M39	UPI2_LSIO_TX4
L39	UPI2_LSIO_TX3
R38	UPI2_LSIO_TX2
P38	UPI2_LSIO_TX1
G39	UPI1_LSIO_RX6
F39	UPI1_LSIO_RX5
K37	UPI1_LSIO_RX4
L37	UPI1_LSIO_RX3
K39	UPI1_LSIO_RX2
J39	UPI1_LSIO_RX1
J38	
K36	
J40	
H40	
H38	
G38	
E39	
D39	USB_FPGA_CLK
D38	UPI1_LSIO_TX6
E38	UPI1_LSIO_TX5
E42	UPI1_LSIO_TX4
F42	UPI1_LSIO_TX3
D40	UPI1_LSIO_TX2
C40	UPI1_LSIO_TX1
E41	
F41	TSENSE_ALERTn_1V8
G40	
F40	
B40	
A40	
B39	
A39	USER_PB0
A41	
A42	
C41	CPU_RESETn
D41	
B43	
C43	
B42	
C42	

IO,LVDS2N_1N,DQ0
IO,LVDS2N_1P,DQ0
IO,LVDS2N_2N,DQ0
IO,LVDS2N_2P,DQ0
IO,LVDS2N_3N,DQ0
IO,LVDS2N_3P,DQ0
IO,LVDS2N_4N,DQSN0
IO,LVDS2N_4P,DQS0
IO,LVDS2N_5N,DQ0
IO,LVDS2N_5P,DQ0
IO,LVDS2N_6N,DQ0
IO,LVDS2N_6P,DQ0
IO,LVDS2N_7N,DQ1
IO,LVDS2N_7P,DQ1
IO,LVDS2N_8N,DQ1
IO,LVDS2N_8P,DQ1
IO,LVDS2N_9N,DQ1
IO,LVDS2N_9P,DQ1
IO,PLL_2N_CLKOUT1N,LVDS2N_10N,DQSN1
IO,PLL_2N_CLKOUT1P,PLL_2N_CLKOUT1,PLL_2N_FB1,LVDS2N_10P,DQS1
IO,LVDS2N_11N,DQ1
IO,RZQ_2N,LVDS2N_11P,DQ1
IO,CLK_2N_1N,LVDS2N_12N,DQ1
IO,CLK_2N_1P,LVDS2N_12P,DQ1
IO,CLK_2N_0N,LVDS2N_13N,DQ2
IO,CLK_2N_0P,LVDS2N_13P,DQ2
IO,LVDS2N_14N,DQ2
IO,LVDS2N_14P,DQ2
IO,PLL_2N_CLKOUT0N,LVDS2N_15N,DQ2
IO,PLL_2N_CLKOUT0P,PLL_2N_CLKOUT0,PLL_2N_FB0,LVDS2N_15P,DQ2
IO,LVDS2N_16N,DQSN2
IO,LVDS2N_16P,DQS2
IO,LVDS2N_17N,DQ2
IO,LVDS2N_17P,DQ2
IO,LVDS2N_18N,DQ2
IO,LVDS2N_18P,DQ2
IO,LVDS2N_19N,DQ3
IO,LVDS2N_19P,DQ3
IO,LVDS2N_20N,DQ3
IO,LVDS2N_20P,DQ3
IO,LVDS2N_21N,DQ3
IO,LVDS2N_21P,DQ3
IO,LVDS2N_22N,DQSN3
IO,LVDS2N_22P,DQS3
IO,LVDS2N_23N,DQ3
IO,LVDS2N_23P,DQ3
IO,LVDS2N_24N,DQ3
IO,LVDS2N_24P,DQ3

U1-9 — IO BANK 2M (1.2V)

S10_DX_ND5_F2912D_EXTERNAL

Pin	Net
M40	DDR4_CH1_DQ62
L40	DDR4_CH1_DQ60
P40	DDR4_CH1_DQ59
N40	DDR4_CH1_DQ63
T40	DDR4_CH1_DQ56
T39	DDR4_CH1_DQ57
N41	DDR4_CH1_DQS7N
P41	DDR4_CH1_DQS7P
V40	DDR4_CH1_DQ58
U40	DDR4_CH1_DQ61
T41	DDR4_CH1_DM7
R41	
H42	DDR4_CH1_DQ71
G42	DDR4_CH1_DQ66
L42	DDR4_CH1_DQ65
K42	DDR4_CH1_DQ67
G43	DDR4_CH1_DQ69
H43	DDR4_CH1_DQ70
L41	DDR4_CH1_DQS8N
K41	DDR4_CH1_DQS8P
J43	DDR4_CH1_DQ64
J44	DDR4_CH1_DQ68
H41	DDR4_CH1_DM8
J41	
D44	DDR4_CH1_DQ19
E44	DDR4_CH1_DQ23
D43	DDR4_CH1_DQ17
E43	DDR4_CH1_DQ21
E46	DDR4_CH1_DQ16
F46	DDR4_CH1_DQ22
G44	DDR4_CH1_DQS2N
F44	DDR4_CH1_DQS2P
E47	DDR4_CH1_DQ20
F47	DDR4_CH1_DQ18
G45	DDR4_CH1_DM2
F45	
C47	DDR4_CH1_DQ33
B47	DDR4_CH1_DQ38
B44	DDR4_CH1_DQ37
A44	DDR4_CH1_DQ35
B45	DDR4_CH1_DQ32
A45	DDR4_CH1_DQ34
D45	DDR4_CH1_DQS4N
C45	DDR4_CH1_DQS4P
A46	DDR4_CH1_DQ36
A47	DDR4_CH1_DQ39
C46	DDR4_CH1_DM4
D46	

IO,LVDS2M_1N,DQ4
IO,LVDS2M_1P,DQ4
IO,LVDS2M_2N,DQ4
IO,LVDS2M_2P,DQ4
IO,LVDS2M_3N,DQ4
IO,LVDS2M_3P,DQ4
IO,LVDS2M_4N,DQSN4
IO,LVDS2M_4P,DQS4
IO,LVDS2M_5N,DQ4
IO,LVDS2M_5P,DQ4
IO,LVDS2M_6N,DQ4
IO,LVDS2M_6P,DQ4
IO,LVDS2M_7N,DQ5
IO,LVDS2M_7P,DQ5
IO,LVDS2M_8N,DQ5
IO,LVDS2M_8P,DQ5
IO,LVDS2M_9N,DQ5
IO,LVDS2M_9P,DQ5
IO,PLL_2M_CLKOUT1N,LVDS2M_10N,DQSN5
IO,PLL_2M_CLKOUT1P,PLL_2M_CLKOUT1,PLL_2M_FB1,LVDS2M_10P,DQS5
IO,LVDS2M_11N,DQ5
IO,RZQ_2M,LVDS2M_11P,DQ5
IO,CLK_2M_1N,LVDS2M_12N,DQ5
IO,CLK_2M_1P,LVDS2M_12P,DQ5
IO,CLK_2M_0N,LVDS2M_13N,DQ6
IO,CLK_2M_0P,LVDS2M_13P,DQ6
IO,LVDS2M_14N,DQ6
IO,LVDS2M_14P,DQ6
IO,PLL_2M_CLKOUT0N,LVDS2M_15N,DQ6
IO,PLL_2M_CLKOUT0P,PLL_2M_CLKOUT0,PLL_2M_FB0,LVDS2M_15P,DQ6
IO,LVDS2M_16N,DQSN6
IO,LVDS2M_16P,DQS6
IO,LVDS2M_17N,DQ6
IO,LVDS2M_17P,DQ6
IO,LVDS2M_18N,DQ6
IO,LVDS2M_18P,DQ6
IO,LVDS2M_19N,DQ7
IO,LVDS2M_19P,DQ7
IO,LVDS2M_20N,DQ7
IO,LVDS2M_20P,DQ7
IO,LVDS2M_21N,DQ7
IO,LVDS2M_21P,DQ7
IO,LVDS2M_22N,DQSN7
IO,LVDS2M_22P,DQS7
IO,LVDS2M_23N,DQ7
IO,LVDS2M_23P,DQ7
IO,LVDS2M_24N,DQ7
IO,LVDS2M_24P,DQ7

U1-7 — IO BANK 2K (1.2V)

S10_DX_ND5_F2912D_EXTERNAL

Pin	Net
L47	DDR4_CH1_DQ44
L46	DDR4_CH1_DQ42
P44	DDR4_CH1_DQ41
P45	DDR4_CH1_DQ45
M47	DDR4_CH1_DQ40
M48	DDR4_CH1_DQ46
M45	DDR4_CH1_DQS5N
N45	DDR4_CH1_DQS5P
N47	DDR4_CH1_DQ47
N46	DDR4_CH1_DQ43
T44	DDR4_CH1_DM5
R44	
J49	DDR4_CH1_DQ31
J50	DDR4_CH1_DQ28
K47	DDR4_CH1_DQ25
K48	DDR4_CH1_DQ29
M49	DDR4_CH1_DQ27
M50	DDR4_CH1_DQ26
K49	DDR4_CH1_DQS3N
L49	DDR4_CH1_DQS3P
L50	DDR4_CH1_DQ24
L51	DDR4_CH1_DQ30
H50	DDR4_CH1_DM3
H51	
K54	DDR4_CH1_DQ4
L54	DDR4_CH1_DQ6
K53	DDR4_CH1_DQ0
K52	DDR4_CH1_DQ2
L52	DDR4_CH1_DQ1
M52	DDR4_CH1_DQ5
K51	DDR4_CH1_DQS0N
J51	DDR4_CH1_DQS0P
M54	DDR4_CH1_DQ7
M53	DDR4_CH1_DQ3
J54	DDR4_CH1_DM0
J53	
G54	DDR4_CH1_DQ12
F54	DDR4_CH1_DQ10
H52	DDR4_CH1_DQ15
G52	DDR4_CH1_DQ14
E53	DDR4_CH1_DQ8
D53	DDR4_CH1_DQ9
H53	DDR4_CH1_DQS1N
G53	DDR4_CH1_DQS1P
E54	DDR4_CH1_DQ11
D54	DDR4_CH1_DQ13
F52	DDR4_CH1_DM1
E52	

IO,LVDS2K_1N,DQ12
IO,LVDS2K_1P,DQ12
IO,LVDS2K_2N,DQ12
IO,LVDS2K_2P,DQ12
IO,LVDS2K_3N,DQ12
IO,LVDS2K_3P,DQ12
IO,LVDS2K_4N,DQSN12
IO,LVDS2K_4P,DQS12
IO,LVDS2K_5N,DQ12
IO,LVDS2K_5P,DQ12
IO,LVDS2K_6N,DQ12
IO,LVDS2K_6P,DQ12
IO,LVDS2K_7N,DQ13
IO,LVDS2K_7P,DQ13
IO,LVDS2K_8N,DQ13
IO,LVDS2K_8P,DQ13
IO,LVDS2K_9N,DQ13
IO,LVDS2K_9P,DQ13
IO,PLL_2K_CLKOUT1N,LVDS2K_10N,DQSN13
IO,PLL_2K_CLKOUT1P,PLL_2K_CLKOUT1,PLL_2K_FB1,LVDS2K_10P,DQS13
IO,LVDS2K_11N,DQ13
IO,RZQ_2K,LVDS2K_11P,DQ13
IO,CLK_2K_1N,LVDS2K_12N,DQ13
IO,CLK_2K_1P,LVDS2K_12P,DQ13
IO,CLK_2K_0N,LVDS2K_13N,DQ14
IO,CLK_2K_0P,LVDS2K_13P,DQ14
IO,LVDS2K_14N,DQ14
IO,LVDS2K_14P,DQ14
IO,PLL_2K_CLKOUT0N,LVDS2K_15N,DQ14
IO,PLL_2K_CLKOUT0P,PLL_2K_CLKOUT0,PLL_2K_FB0,LVDS2K_15P,DQ14
IO,LVDS2K_16N,DQSN14
IO,LVDS2K_16P,DQS14
IO,LVDS2K_17N,DQ14
IO,LVDS2K_17P,DQ14
IO,LVDS2K_18N,DQ14
IO,LVDS2K_18P,DQ14
IO,LVDS2K_19N,DQ15
IO,LVDS2K_19P,DQ15
IO,LVDS2K_20N,DQ15
IO,LVDS2K_20P,DQ15
IO,LVDS2K_21N,DQ15
IO,LVDS2K_21P,DQ15
IO,LVDS2K_22N,DQSN15
IO,LVDS2K_22P,DQS15
IO,LVDS2K_23N,DQ15
IO,LVDS2K_23P,DQ15
IO,LVDS2K_24N,DQ15
IO,LVDS2K_24P,DQ15

Memory

38,39,40 DDR4_CH1_DQ[71:0]

40 DDR4_CH1_DM8
40 DDR4_CH1_DQS8n
40 DDR4_CH1_DQS8p

39 DDR4_CH1_DM7
39 DDR4_CH1_DQS7n
39 DDR4_CH1_DQS7p

39 DDR4_CH1_DM6
39 DDR4_CH1_DQS6n
39 DDR4_CH1_DQS6p

39 DDR4_CH1_DM5
39 DDR4_CH1_DQS5n
39 DDR4_CH1_DQS5p

39 DDR4_CH1_DM4
39 DDR4_CH1_DQS4n
39 DDR4_CH1_DQS4p

38 DDR4_CH1_DM3
38 DDR4_CH1_DQS3n
38 DDR4_CH1_DQS3p

38 DDR4_CH1_DM2
38 DDR4_CH1_DQS2n
38 DDR4_CH1_DQS2p

38 DDR4_CH1_DM1
38 DDR4_CH1_DQS1n
38 DDR4_CH1_DQS1p

38 DDR4_CH1_DM0
38 DDR4_CH1_DQS0n
38 DDR4_CH1_DQS0p

38,39,40,41 DDR4_CH1_BG1
38,39,40,41 DDR4_CH1_BG0
38,39,40,41 DDR4_CH1_BA1
38,39,40,41 DDR4_CH1_BA0

38,39,40,41 DDR4_CH1_A16
38,39,40,41 DDR4_CH1_A15
38,39,40,41 DDR4_CH1_A14
38,39,40,41 DDR4_CH1_A13
38,39,40,41 DDR4_CH1_A12

38,39,40,41 DDR4_CH1_A11
38,39,40,41 DDR4_CH1_A10
38,39,40,41 DDR4_CH1_A9
38,39,40,41 DDR4_CH1_A8
38,39,40,41 DDR4_CH1_A7
38,39,40,41 DDR4_CH1_A6
38,39,40,41 DDR4_CH1_A5
38,39,40,41 DDR4_CH1_A4
38,39,40,41 DDR4_CH1_A3
38,39,40,41 DDR4_CH1_A2
38,39,40,41 DDR4_CH1_A1
38,39,40,41 DDR4_CH1_A0
38,39,40,41 DDR4_CH1_PAR
38,39,40 DDR4_CH1_ALERTn
38,39,40,41 DDR4_CH1_CKn
38,39,40,41 DDR4_CH1_CKp

38,39,40,41 DDR4_CH1_CKE

38,39,40,41 DDR4_CH1_ODT
38,39,40,41 DDR4_CH1_ACTn
38,39,40,41 DDR4_CH1_CSn
38,39,40,41 DDR4_CH1_RESETn

Interfaces

UPI1_LSIO_TX[6:1] 26
UPI1_LSIO_RX[6:1] 26

UPI2_LSIO_TX[6:1] 27
UPI2_LSIO_RX[6:1] 27

TSENSE_ALERTn_1V8 68

PUSH BUTTON INTERFACE

USER_PB0 31

USB_FPGA_CLK 23

CPU_RESETn 23,31

Intel Corporation, 101 Innovation Dr., San Jose CA 95134
Copyright (c) 2016, Intel Corporation. All Rights Reserved.

Title: **Stratix 10 DX FPGA DEVKIT Board**

Size	Document Number	Rev
C	150-0330653-A (K49172-001)	A

Date: Friday, May 24, 2019 Sheet 9 of 69

S10 DX Bank 3A, B, C, D

U1-11

DDR4_DIMM_CH0_DQ12	BP24	IO,LVDS3A_1n,DQ92,AVST_DATA0
DDR4_DIMM_CH0_DQ13	BP23	IO,LVDS3A_1p,DQ92,AVST_DATA1
DDR4_DIMM_CH0_DQS_N10	BP26	IO,LVDS3A_2n,DQ92,AVST_DATA2
DDR4_DIMM_CH0_DQS_P10	BN26	IO,LVDS3A_2p,DQ92,AVST_DATA3
DDR4_DIMM_CH0_DQ14	BN22	IO,LVDS3A_3n,DQ92,AVST_DATA4
DDR4_DIMM_CH0_DQ15	BN23	IO,LVDS3A_3p,DQ92,AVST_DATA5
DDR4_DIMM_CH0_DQS_N1	BP25	IO,LVDS3A_4n,DQSn92,AVST_DATA6
DDR4_DIMM_CH0_DQS_P1	BN25	IO,LVDS3A_4p,DQS92,AVST_DATA7
DDR4_DIMM_CH0_DQ11	BM24	IO,LVDS3A_5n,DQ92,AVST_DATA8
DDR4_DIMM_CH0_DQ10	BM23	IO,LVDS3A_5p,DQ92,AVST_DATA9
DDR4_DIMM_CH0_DQ8	BL25	IO,LVDS3A_6n,DQ92,AVST_DATA10
DDR4_DIMM_CH0_DQ9	BM25	IO,LVDS3A_6p,DQ92,AVST_DATA11
DDR4_DIMM_CH0_DQ21	BK26	IO,LVDS3A_7n,DQ93,AVST_DATA12
DDR4_DIMM_CH0_DQ20	BL26	IO,LVDS3A_7p,DQ93,AVST_DATA13
DDR4_DIMM_CH0_DQS_N11	BH26	IO,LVDS3A_8n,DQ93,AVST_DATA14
DDR4_DIMM_CH0_DQS_P11	BJ26	IO,LVDS3A_8p,DQ93,AVST_DATA15
DDR4_DIMM_CH0_DQ23	BK23	IO,LVDS3A_9n,DQ93,AVST_DATA16
DDR4_DIMM_CH0_DQ22	BJ23	IO,LVDS3A_9p,DQ93,AVST_DATA17
DDR4_DIMM_CH0_DQS_N2	BL24	IO,PLL_3A_CLKOUT1n,LVDS3A_10n,DQSn93,AVST_DATA18
DDR4_DIMM_CH0_DQS_P2	BK24	IO,PLL_3A_CLKOUT1p,PLL_3A_CLKOUT1,PLL_3A_FB1,LVDS3A_10p,DQS93,AVST_DATA19
DDR4_DIMM_CH0_DQ16	BH23	IO,LVDS3A_11n,DQ93
DDR4_DIMM_CH0_DQ18	BG23	IO,RZQ_3A,LVDS3A_11p,DQ93,AVST_VALID,AVST_VALID
DDR4_DIMM_CH0_DQ19	BJ25	IO,CLK_3A_1n,LVDS3A_12n,DQ93,AVST_DATA20
DDR4_DIMM_CH0_DQ17	BJ24	IO,CLK_3A_1p,LVDS3A_12p,DQ93,AVST_DATA21
DDR4_DIMM_CH0_DQ7	BG24	IO,CLK_3A_0n,LVDS3A_13n,DQ94,AVST_DATA22
DDR4_DIMM_CH0_DQ5	BH25	IO,CLK_3A_0p,LVDS3A_13p,DQ94,AVST_DATA23
DDR4_DIMM_CH0_DQS_N9	BF27	IO,LVDS3A_14n,DQ94,AVST_DATA24
DDR4_DIMM_CH0_DQS_P9	BE27	IO,LVDS3A_14p,DQ94,AVST_DATA25
DDR4_DIMM_CH0_DQ4	BF25	IO,PLL_3A_CLKOUT0n,LVDS3A_15n,DQ94,AVST_DATA26
DDR4_DIMM_CH0_DQ6	BG25	IO,PLL_3A_CLKOUT0p,PLL_3A_CLKOUT0,PLL_3A_FB0,LVDS3A_15p,DQ94,AVST_DATA27
DDR4_DIMM_CH0_DQS_N0	BE26	IO,LVDS3A_16n,DQSn94,AVST_DATA28
DDR4_DIMM_CH0_DQS_P0	BF26	IO,LVDS3A_16p,DQS94,AVST_DATA29
DDR4_DIMM_CH0_DQ0	BF24	IO,LVDS3A_17n,DQ94,AVST_DATA30
DDR4_DIMM_CH0_DQ1	BE24	IO,LVDS3A_17p,DQ94,AVST_DATA31
DDR4_DIMM_CH0_DQ2	BH27	IO,LVDS3A_18n,DQ94
DDR4_DIMM_CH0_DQ3	BG27	IO,LVDS3A_18p,DQ94
DDR4_DIMM_CH0_DQ61	BD23	IO,LVDS3A_19n,DQ95
DDR4_DIMM_CH0_DQ60	BE23	IO,LVDS3A_19p,DQ95
DDR4_DIMM_CH0_DQS_N16	BB25	IO,LVDS3A_20n,DQ95
DDR4_DIMM_CH0_DQS_P16	BC25	IO,LVDS3A_20p,DQ95
DDR4_DIMM_CH0_DQ63	BC23	IO,LVDS3A_21n,DQ95
DDR4_DIMM_CH0_DQ62	BB23	IO,LVDS3A_21p,DQ95
DDR4_DIMM_CH0_DQS_N7	BA24	IO,LVDS3A_22n,DQSn95
DDR4_DIMM_CH0_DQS_P7	BB24	IO,LVDS3A_22p,DQS95
DDR4_DIMM_CH0_DQ59	AW24	IO,LVDS3A_23n,DQ95
DDR4_DIMM_CH0_DQ58	AY24	IO,LVDS3A_23p,DQ95
DDR4_DIMM_CH0_DQ56	BD25	IO,LVDS3A_24n,DQ95
DDR4_DIMM_CH0_DQ57	BD26	IO,LVDS3A_24p,DQ95,AVST_CLK

1.2V

DQSn/P for x4

DQSn/P for x4

DQSn/P for x4

IO BANK 3A

S10_DX_ND5_F2912D_EXTERNAL

U1-13

BD18	DDR4_DIMM_CH0_DQ55	IO,LVDS3C_1N,DQ84
BE17	DDR4_DIMM_CH0_DQ54	IO,LVDS3C_1P,DQ84
BC18	DDR4_DIMM_CH0_DQS_N15	IO,LVDS3C_2N,DQ84
BC17	DDR4_DIMM_CH0_DQS_P15	IO,LVDS3C_2P,DQ84
BF15	DDR4_DIMM_CH0_DQ53	IO,LVDS3C_3N,DQ84
BF16	DDR4_DIMM_CH0_DQ52	IO,LVDS3C_3P,DQ84
BD16	DDR4_DIMM_CH0_DQS_N6	IO,LVDS3C_4N,DQSN84
BE16	DDR4_DIMM_CH0_DQS_P6	IO,LVDS3C_4P,DQS84
BG17	DDR4_DIMM_CH0_DQ51	IO,LVDS3C_5N,DQ84
BF17	DDR4_DIMM_CH0_DQ50	IO,LVDS3C_5P,DQ84
BC16	DDR4_DIMM_CH0_DQ48	IO,LVDS3C_6N,DQ84
BD15	DDR4_DIMM_CH0_DQ49	IO,LVDS3C_6P,DQ84
BF14	DDR4_DIMM_CH0_DQ38	IO,LVDS3C_7N,DQ85
BG14	DDR4_DIMM_CH0_DQ36	IO,LVDS3C_7P,DQ85
BH12	DDR4_DIMM_CH0_DQS_N13	IO,LVDS3C_8N,DQ85
BH13	DDR4_DIMM_CH0_DQS_P13	IO,LVDS3C_8P,DQ85
BH16	DDR4_DIMM_CH0_DQ37	IO,LVDS3C_9N,DQ85
BH17	DDR4_DIMM_CH0_DQ39	IO,LVDS3C_9P,DQ85
BG15	DDR4_DIMM_CH0_DQS_N4	IO,PLL_3C_CLKOUT1N,LVDS3C_10N,DQSN85
BH15	DDR4_DIMM_CH0_DQS_P4	IO,PLL_3C_CLKOUT1P,PLL_3C_CLKOUT1,PLL_3C_FB1,LVDS3C_10P,DQS85
BJ15	DDR4_DIMM_CH0_DQ33	IO,LVDS3C_11N,DQ85
BJ16	DDR4_DIMM_CH0_DQ34	IO,RZQ_3C,LVDS3C_11P,DQ85
BJ13	DDR4_DIMM_CH0_DQ35	IO,CLK_3C_1N,LVDS3C_12N,DQ85
BJ14	DDR4_DIMM_CH0_DQ32	IO,CLK_3C_1P,LVDS3C_12P,DQ85
BL15	DDR4_DIMM_CH0_DQ68	IO,CLK_3C_0N,LVDS3C_13N,DQ86
BL16	DDR4_DIMM_CH0_DQ70	IO,CLK_3C_0P,LVDS3C_13P,DQ86
BK13	DDR4_DIMM_CH0_DQS_N17	IO,LVDS3C_14N,DQ86
BK12	DDR4_DIMM_CH0_DQS_P17	IO,LVDS3C_14P,DQ86
BK16	DDR4_DIMM_CH0_DQ71	IO,PLL_3C_CLKOUT0N,LVDS3C_15N,DQ86
BK17	DDR4_DIMM_CH0_DQ69	IO,PLL_3C_CLKOUT0P,PLL_3C_CLKOUT0,PLL_3C_FB0,LVDS3C_15P,DQ86
BL14	DDR4_DIMM_CH0_DQS_N8	IO,LVDS3C_16N,DQSN86
BK14	DDR4_DIMM_CH0_DQS_P8	IO,LVDS3C_16P,DQS86
BL17	DDR4_DIMM_CH0_DQ66	IO,LVDS3C_17N,DQ86
BM17	DDR4_DIMM_CH0_DQ65	IO,LVDS3C_17P,DQ86
BM12	DDR4_DIMM_CH0_DQ64	IO,LVDS3C_18N,DQ86
BL12	DDR4_DIMM_CH0_DQ67	IO,LVDS3C_18P,DQ86
BN13	DDR4_DIMM_CH0_DQ30	IO,LVDS3C_19N,DQ87
BN12	DDR4_DIMM_CH0_DQ31	IO,LVDS3C_19P,DQ87
BM13	DDR4_DIMM_CH0_DQS_N12	IO,LVDS3C_20N,DQ87
BM14	DDR4_DIMM_CH0_DQS_P12	IO,LVDS3C_20P,DQ87
BN16	DDR4_DIMM_CH0_DQ29	IO,LVDS3C_21N,DQ87
BN17	DDR4_DIMM_CH0_DQ28	IO,LVDS3C_21P,DQ87
BN15	DDR4_DIMM_CH0_DQS_N3	IO,LVDS3C_22N,DQSN87
BM15	DDR4_DIMM_CH0_DQS_P3	IO,LVDS3C_22P,DQS87
BP15	DDR4_DIMM_CH0_DQ24	IO,LVDS3C_23N,DQ87
BP16	DDR4_DIMM_CH0_DQ25	IO,LVDS3C_23P,DQ87
BP13	DDR4_DIMM_CH0_DQ26	IO,LVDS3C_24N,DQ87
BP14	DDR4_DIMM_CH0_DQ27	IO,LVDS3C_24P,DQ87

1.2V

DQSn/P for x4

DQSn/P for x4

DQSn/P for x4

IO BANK 3C

S10_DX_ND5_F2912D_EXTERNAL

DDR4 DIMM CH0 IF

42	DDR4_DIMM_CH0_C2	
42	DDR4_DIMM_CH0_RESET_N	
42	DDR4_DIMM_CH0_ACT_N	
42	DDR4_DIMM_CH0_PAR	
42	DDR4_DIMM_CH0_ALERT_N	
42	DDR4_DIMM_CH0_CK_P[1:0]	
42	DDR4_DIMM_CH0_CK_N[1:0]	
42	DDR4_DIMM_CH0_CKE[1:0]	
42	DDR4_DIMM_CH0_ODT[1:0]	
42	DDR4_DIMM_CH0_BG[1:0]	
42	DDR4_DIMM_CH0_BA[1:0]	
42	DDR4_DIMM_CH0_CS_N[3:0]	
42	DDR4_DIMM_CH0_DQS_P[17:0]	
42	DDR4_DIMM_CH0_DQS_N[17:0]	
42	DDR4_DIMM_CH0_A[17:0]	
42	DDR4_DIMM_CH0_DQ[71:0]	

CLOCK

R6354 100

CLK_133M_DIMM_1_P	22	
CLK_133M_DIMM_1_N	22	

U1-12

DDR4_DIMM_CH0_CK_N1	BA22	IO,LVDS3B_1N,DQ88
DDR4_DIMM_CH0_CK_P1	BB22	IO,LVDS3B_1P,DQ88
	BE18	IO,LVDS3B_2N,DQ88
	BE19	IO,LVDS3B_2P,DQ88
DDR4_DIMM_CH0_ALERT_N	BC20	IO,LVDS3B_3N,DQ88
	BC21	IO,LVDS3B_3P,DQ88
	BA20	IO,LVDS3B_4N,DQSN88
	BB20	IO,LVDS3B_4P,DQS88
	BC22	IO,LVDS3B_5N,DQ88
DDR4_DIMM_CH0_C2	BD21	IO,LVDS3B_5P,DQ88
DDR4_DIMM_CH0_CS_N3	BD20	IO,LVDS3B_6N,DQ88
DDR4_DIMM_CH0_CS_N2	BD19	IO,LVDS3B_6P,DQ88
DDR4_DIMM_CH0_BG0	BE21	IO,LVDS3B_7N,DQ89
DDR4_DIMM_CH0_BA1	BF21	IO,LVDS3B_7P,DQ89
DDR4_DIMM_CH0_BA0	BG18	IO,LVDS3B_8N,DQ89
DDR4_DIMM_CH0_A17	BH18	IO,LVDS3B_8P,DQ89
DDR4_DIMM_CH0_A16	BF22	IO,LVDS3B_9N,DQ89
DDR4_DIMM_CH0_A15	BG22	IO,LVDS3B_9P,DQ89
DDR4_DIMM_CH0_A14	BF20	IO,PLL_3B_CLKOUT1N,LVDS3B_10N,DQSN89
DDR4_DIMM_CH0_A13	BG20	IO,PLL_3B_CLKOUT1P,PLL_3B_CLKOUT1,PLL_3B_FB1,LVDS3B_10P,DQS89
DDR4_DIMM_CH0_A12	BH22	IO,LVDS3B_11N,DQ89
RZQ_3B	BH21	IO,RZQ_3B,LVDS3B_11P,DQ89
CLK_133M_DIMM_1_N	BG19	IO,CLK_3B_1N,LVDS3B_12N,DQ89
CLK_133M_DIMM_1_P	BF19	IO,CLK_3B_1P,LVDS3B_12P,DQ89
DDR4_DIMM_CH0_A11	BJ21	IO,CLK_3B_0N,LVDS3B_13N,DQ90
DDR4_DIMM_CH0_A10	BK21	IO,CLK_3B_0P,LVDS3B_13P,DQ90
DDR4_DIMM_CH0_A9	BK18	IO,LVDS3B_14N,DQ90
DDR4_DIMM_CH0_A8	BJ18	IO,LVDS3B_14P,DQ90
DDR4_DIMM_CH0_A7	BL19	IO,PLL_3B_CLKOUT0N,LVDS3B_15N,DQ90
DDR4_DIMM_CH0_A6	BL20	IO,PLL_3B_CLKOUT0P,PLL_3B_CLKOUT0,PLL_3B_FB0,LVDS3B_15P,DQ90
DDR4_DIMM_CH0_A5	BJ20	IO,LVDS3B_16N,DQSN90
DDR4_DIMM_CH0_A4	BH20	IO,LVDS3B_16P,DQS90
DDR4_DIMM_CH0_A3	BK22	IO,LVDS3B_17N,DQ90
DDR4_DIMM_CH0_A2	BL22	IO,LVDS3B_17P,DQ90
DDR4_DIMM_CH0_A1	BK19	IO,LVDS3B_18N,DQ90
DDR4_DIMM_CH0_A0	BJ19	IO,LVDS3B_18P,DQ90
DDR4_DIMM_CH0_PAR	BL21	IO,LVDS3B_19N,DQ91
DDR4_DIMM_CH0_CS_N1	BM22	IO,LVDS3B_19P,DQ91
DDR4_DIMM_CH0_CK_N0	BM19	IO,LVDS3B_20N,DQ91
DDR4_DIMM_CH0_CK_P0	BM18	IO,LVDS3B_20P,DQ91
DDR4_DIMM_CH0_CKE1	BN18	IO,LVDS3B_21N,DQ91
DDR4_DIMM_CH0_CKE0	BP18	IO,LVDS3B_21P,DQ91
DDR4_DIMM_CH0_ODT1	BM20	IO,LVDS3B_22N,DQSN91
DDR4_DIMM_CH0_ODT0	BN20	IO,LVDS3B_22P,DQS91
DDR4_DIMM_CH0_ACT_N	BN21	IO,LVDS3B_23N,DQ91
DDR4_DIMM_CH0_CS_N0	BP21	IO,LVDS3B_23P,DQ91
DDR4_DIMM_CH0_RESET_N	BP19	IO,LVDS3B_24N,DQ91
DDR4_DIMM_CH0_BG1	BP20	IO,LVDS3B_24P,DQ91

240 1% R28 R0201

1.2V

IO BANK 3B

S10_DX_ND5_F2912D_EXTERNAL

U1-14

BD13	DDR4_DIMM_CH0_DQ46	IO,CLK_3D_0N,LVDS3D_13N,DQ82
BE13	DDR4_DIMM_CH0_DQ44	IO,CLK_3D_0P,LVDS3D_13P,DQ82
BG10	DDR4_DIMM_CH0_DQS_N14	IO,LVDS3D_14N,DQ82
BF10	DDR4_DIMM_CH0_DQS_P14	IO,LVDS3D_14P,DQ82
BD14	DDR4_DIMM_CH0_DQ45	IO,PLL_3D_CLKOUT0N,LVDS3D_15N,DQ82
BE14	DDR4_DIMM_CH0_DQ47	IO,PLL_3D_CLKOUT0P,PLL_3D_CLKOUT0,PLL_3D_FB0,LVDS3D_15P,DQ82
BE12	DDR4_DIMM_CH0_DQS_N5	IO,LVDS3D_16N,DQSN82
BF12	DDR4_DIMM_CH0_DQS_P5	IO,LVDS3D_16P,DQS82
BG12	DDR4_DIMM_CH0_DQ40	IO,LVDS3D_17N,DQ82
BG13	DDR4_DIMM_CH0_DQ42	IO,LVDS3D_17P,DQ82
BF11	DDR4_DIMM_CH0_DQ41	IO,LVDS3D_18N,DQ82
BE11	DDR4_DIMM_CH0_DQ43	IO,LVDS3D_18P,DQ82
BL10		IO,LVDS3D_19N,DQ83
BM10		IO,LVDS3D_19P,DQ83
BH10		IO,LVDS3D_20N,DQ83
BJ10		IO,LVDS3D_20P,DQ83
BN10		IO,LVDS3D_21N,DQ83
BP10		IO,LVDS3D_21P,DQ83
BH11		IO,LVDS3D_22N,DQSN83
BJ11		IO,LVDS3D_22P,DQS83
BN11		IO,LVDS3D_23N,DQ83
BP11		IO,LVDS3D_23P,DQ83
BK11		IO,LVDS3D_24N,DQ83
BL11		IO,LVDS3D_24P,DQ83

1.2V

DQSn/P for x4

IO BANK 3D

S10_DX_ND5_F2912D_EXTERNAL

Intel Corporation, 101 Innovation Dr., San Jose CA 95134
Copyright (c) 2016, Intel Corporation. All Rights Reserved.

Title: Stratix 10 DX FPGA DEVKIT Board

Size	Document Number	Rev
C	150-0330653-A (K49172-001)	A

Date: Friday, May 24, 2019 Sheet 10 of 69

S10 DX Bank 3I,J,K

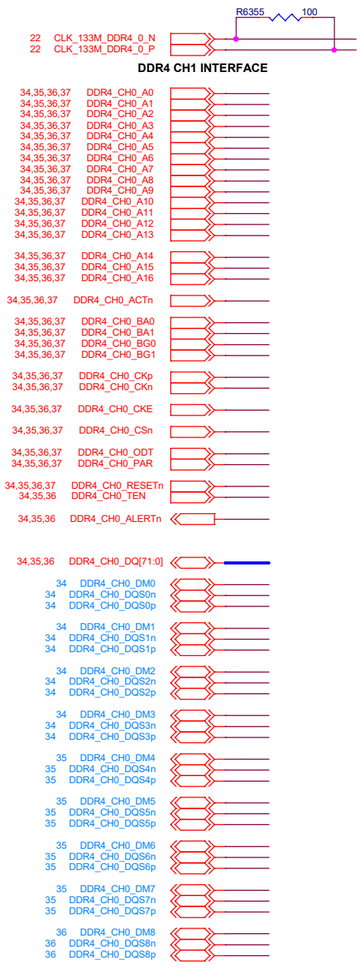

Intel Corporation, 101 Innovation Dr., San Jose CA 95134
Copyright (c) 2016, Intel Corporation. All Rights Reserved.

Title	Stratix 10 DX FPGA DEVKIT Board	
Size C	Document Number 150-0330653-A (K49172-001)	Rev A
Date: Friday, May 24, 2019	Sheet 11 of 69	

S10 DX Bank 3H, L

IO BANK 3L

U1-19

IO,LVDS3L_1N,DQ48	P26	S10_UPI0_PERSTn_SEL	
IO,LVDS3L_1P,DQ48	N26	S10_UPI1_PERSTn_SEL	
IO,LVDS3L_2N,DQ48	P28	S10_UPI2_PERSTn_SEL	
IO,LVDS3L_2P,DQ48	R28	UPI2_Rp_IO	
IO,LVDS3L_3N,DQ48	R26	S10_UPI0_PRNSTn_1V8	
IO,LVDS3L_3P,DQ48	R27	S10_UPI1_PRNSTn_1V8	
IO,LVDS3L_4N,DQSN48	N27	S10_UPI2_PRNSTn_1V8	
IO,LVDS3L_4P,DQS48	M27	UPI1_Rp_IO	
IO,LVDS3L_5N,DQ48	L27	UPI0_LSIO_TX1	
IO,LVDS3L_5P,DQ48	L26	UPI0_LSIO_TX2	
IO,LVDS3L_6N,DQ48	M28	UPI0_LSIO_TX3	
IO,LVDS3L_6P,DQ48	N28	UPI0_LSIO_TX4	
IO,LVDS3L_7N,DQ49	J26	UPI0_LSIO_TX5	
IO,LVDS3L_7P,DQ49	K26	UPI0_LSIO_TX6	
IO,LVDS3L_8N,DQ49	G27	UPI0_Rp_IO	
IO,LVDS3L_8P,DQ49	F26	UPI0_LSIO_RX1	
IO,LVDS3L_9N,DQ49	H26	UPI0_LSIO_RX2	
IO,LVDS3L_9P,DQ49	H27	UPI0_LSIO_RX3	
IO,PLL_3L_CLKOUT1N,LVDS3L_10N,DQSN49	G28	UPI0_LSIO_RX4	
IO,PLL_3L_CLKOUT1P,PLL_3L_CLKOUT1,PLL_3L_FB1,LVDS3L_10P,DQS49	H28	UPI0_LSIO_RX5	
IO,LVDS3L_11N,DQ49	K27	UPI0_LSIO_RX6	
IO,RZQ_3L,LVDS3L_11P,DQ49	K28	RZQ_3L	R6460 100
IO,CLK_3L_1N,LVDS3L_12N,DQ49	J28	CLK_100M_FPGA_3L_1_N	
IO,CLK_3L_1P,LVDS3L_12P,DQ49	J29	CLK_100M_FPGA_3L_1_P	
IO,CLK_3L_0N,LVDS3L_13N,DQ50	B23	CLK_100M_FPGA_3L_0_N	
IO,CLK_3L_0P,LVDS3L_13P,DQ50	C23	CLK_100M_FPGA_3L_0_P	
IO,LVDS3L_14N,DQ50	C26	PCIE_Ep_IO	
IO,LVDS3L_14P,DQ50	C25	UPI0_Ep_IO	
IO,PLL_3L_CLKOUT0N,LVDS3L_15N,DQ50	A24	UPI1_Ep_IO	
IO,PLL_3L_CLKOUT0P,PLL_3L_CLKOUT0,PLL_3L_FB0,LVDS3L_15P,DQ50	B24	UPI2_Ep_IO	
IO,LVDS3L_16N,DQSN50	A25	PCIE_Rp_IO	
IO,LVDS3L_16P,DQS50	B25		
IO,LVDS3L_17N,DQ50	C27		
IO,LVDS3L_17P,DQ50	B27		
IO,LVDS3L_18N,DQ50	A27	UPI_MODE_3L	
IO,LVDS3L_18P,DQ50	A26	UPI0_PCIe_SDA	
IO,LVDS3L_19N,DQ51	F27	UPI0_PCIe_SCL	
IO,LVDS3L_19P,DQ51	E27	UPI1_PCIe_SDA	
IO,LVDS3L_20N,DQ51	C28	UPI1_PCIe_SCL	
IO,LVDS3L_20P,DQ51	B28	UPI2_PCIe_SDA	
IO,LVDS3L_21N,DQ51	E26	UPI2_PCIe_SCL	
IO,LVDS3L_21P,DQ51	D26		
IO,LVDS3L_22N,DQSN51	E28	R6364 0	S10_UPI2_NID0_1V8
IO,LVDS3L_22P,DQS51	D28	R6365 0	S10_UPI2_NID1_1V8
IO,LVDS3L_23N,DQ51	F29	R6366 0	S10_UPI1_NID0_1V8
IO,LVDS3L_23P,DQ51	G29	R6367 0	S10_UPI1_NID1_1V8
IO,LVDS3L_24N,DQ51	D29	R6368 0	S10_UPI0_NID0_1V8
IO,LVDS3L_24P,DQ51	E29	R6369 0	S10_UPI0_NID1_1V8

S10_DX_ND5_F2912D_EXTERNAL

IO BANK 3H

U1-15

1.8V

R5468 10.0K, R5469 10.0K, R5471 10.0K,DNI, R5470 10.0K,DNI

R35 100

FPGA_PR_REQUEST	G30	IO,LVDS3H_1N,DQ64
FPGA_PR_DONE	H30	IO,LVDS3H_1P,DQ64
FPGA_PR_ERROR	K29	IO,LVDS3H_2N,DQ64
	J30	IO,LVDS3H_2P,DQ64
	P30	IO,LVDS3H_3N,DQ64
	N30	IO,LVDS3H_3P,DQ64
	L30	IO,LVDS3H_4N,DQSN64
	M30	IO,LVDS3H_4P,DQS64
	M29	IO,LVDS3H_5N,DQ64
	L29	IO,LVDS3H_5P,DQ64
USER_PUPD1	J31	IO,LVDS3H_6N,DQ64
USER_PUPD2	H31	IO,LVDS3H_6P,DQ64
	D30	IO,LVDS3H_7N,DQ65
	C31	IO,LVDS3H_7P,DQ65
	B29	IO,LVDS3H_8N,DQ65
	A29	IO,LVDS3H_8P,DQ65
	F30	IO,LVDS3H_9N,DQ65
	F31	IO,LVDS3H_9P,DQ65
	C30	IO,PLL_3H_CLKOUT1N,LVDS3H_10N,DQSN65
	B30	IO,PLL_3H_CLKOUT1P,PLL_3H_CLKOUT1,PLL_3H_FB1,LVDS3H_10P,DQS65
	D31	IO,LVDS3H_11N,DQ65
RZQ_3H	E31	IO,RZQ_3H,LVDS3H_11P,DQ65
CLK_100M_FPGA_3H_N	A30	IO,CLK_3H_1N,LVDS3H_12N,DQ65
CLK_100M_FPGA_3H_P	A31	IO,CLK_3H_1P,LVDS3H_12P,DQ65

S10_DX_ND5_F2912D_EXTERNAL

PARTIAL RECONFIG SIGNALS

FPGA_PR_REQUEST 23
FPGA_PR_DONE 23
FPGA_PR_ERROR 23

1.8V

FPGA_PR_DONE — R30 10.0K
FPGA_PR_ERROR — R34 10.0K

UPI INTERFACE

S10_UPI0_PERSTn_SEL 68
S10_UPI1_PERSTn_SEL 68
S10_UPI2_PERSTn_SEL 68

S10_UPI0_PRNSTn_1V8 68
S10_UPI1_PRNSTn_1V8 68
S10_UPI2_PRNSTn_1V8 68

UPI0_LSIO_TX[6:1] 25
UPI0_LSIO_RX[6:1] 25

S10_UPI0_NID0_1V8 17,68
S10_UPI0_NID1_1V8 17,68

S10_UPI1_NID0_1V8 17,68
S10_UPI1_NID1_1V8 17,68

S10_UPI2_NID0_1V8 17,68
S10_UPI2_NID1_1V8 17,68

UPI0_PCIe_SDA 68
UPI0_PCIe_SCL 68

UPI1_PCIe_SDA 68
UPI1_PCIe_SCL 68

UPI2_PCIe_SDA 68
UPI2_PCIe_SCL 68

UPI_MODE_3L 17

PCIE_Ep_IO 68
PCIE_Rp_IO 68

UPI0_Ep_IO 68
UPI0_Rp_IO 68

UPI1_Ep_IO 68
UPI1_Rp_IO 68

UPI2_Ep_IO 68
UPI2_Rp_IO 68

CLOCK

R6359 100 — CLK_100M_FPGA_3L_0_N 22, CLK_100M_FPGA_3L_0_P 22

R6707 100 — CLK_100M_FPGA_3L_1_N 22, CLK_100M_FPGA_3L_1_P 22

R6475 100 — CLK_100M_FPGA_3H_N 22, CLK_100M_FPGA_3H_P 22

Intel Corporation, 101 Innovation Dr., San Jose CA 95134
Copyright (c) 2016, Intel Corporation. All Rights Reserved.

Title: Stratix 10 DX FPGA DEVKIT Board

Size	Document Number	Rev
B	150-0330653-A (K49172-001)	A

Date: Friday, May 24, 2019 Sheet 12 of 69

JTAG /Configuration/Flash Interface Diagram

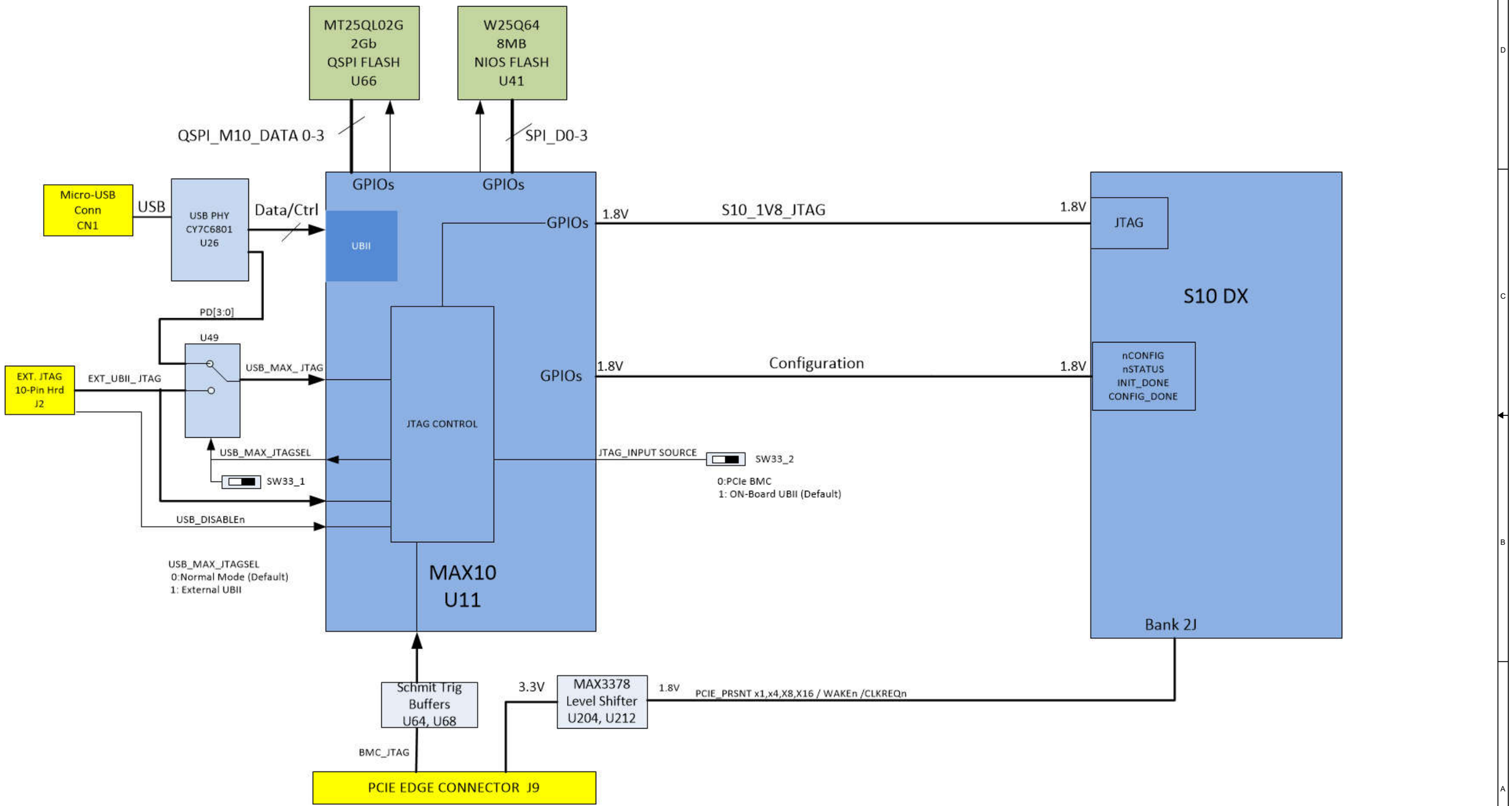

Intel Corporation, 101 Innovation Dr., San Jose CA 95134
Copyright (c) 2016, Intel Corporation. All Rights Reserved.

Title	Stratix 10 DX FPGA DEVKIT Board	
Size: B	Document Number: 150-0330653-A (K49172-001)	Rev: A
Date: Friday, May 24, 2019	Sheet 13 of 69	

S10 DX Xcvr GXER 9A

QSFP1

QSFP1 INTERFACE

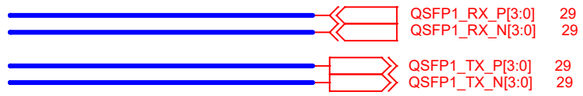

QSFP2

QSFP2 INTERFACE

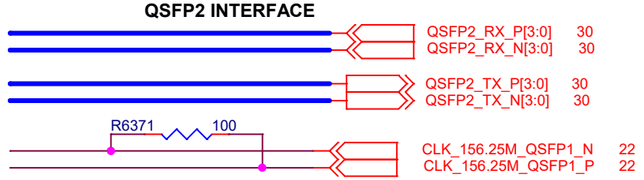

CLOCK

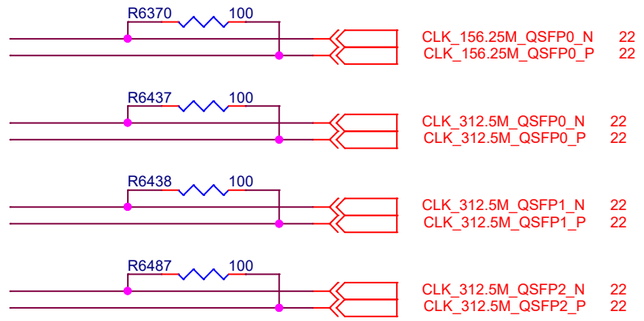

Intel Corporation, 101 Innovation Dr., San Jose CA 95134
Copyright (c) 2016, Intel Corporation. All Rights Reserved.

Title	Stratix 10 DX FPGA DEVKIT Board	
Size: B	Document Number: 150-0330653-A (K49172-001)	Rev: A
Date: Friday, May 24, 2019	Sheet 14 of 69	

S10 DX Xcvr GXPL 10A,10B

PCIE x16

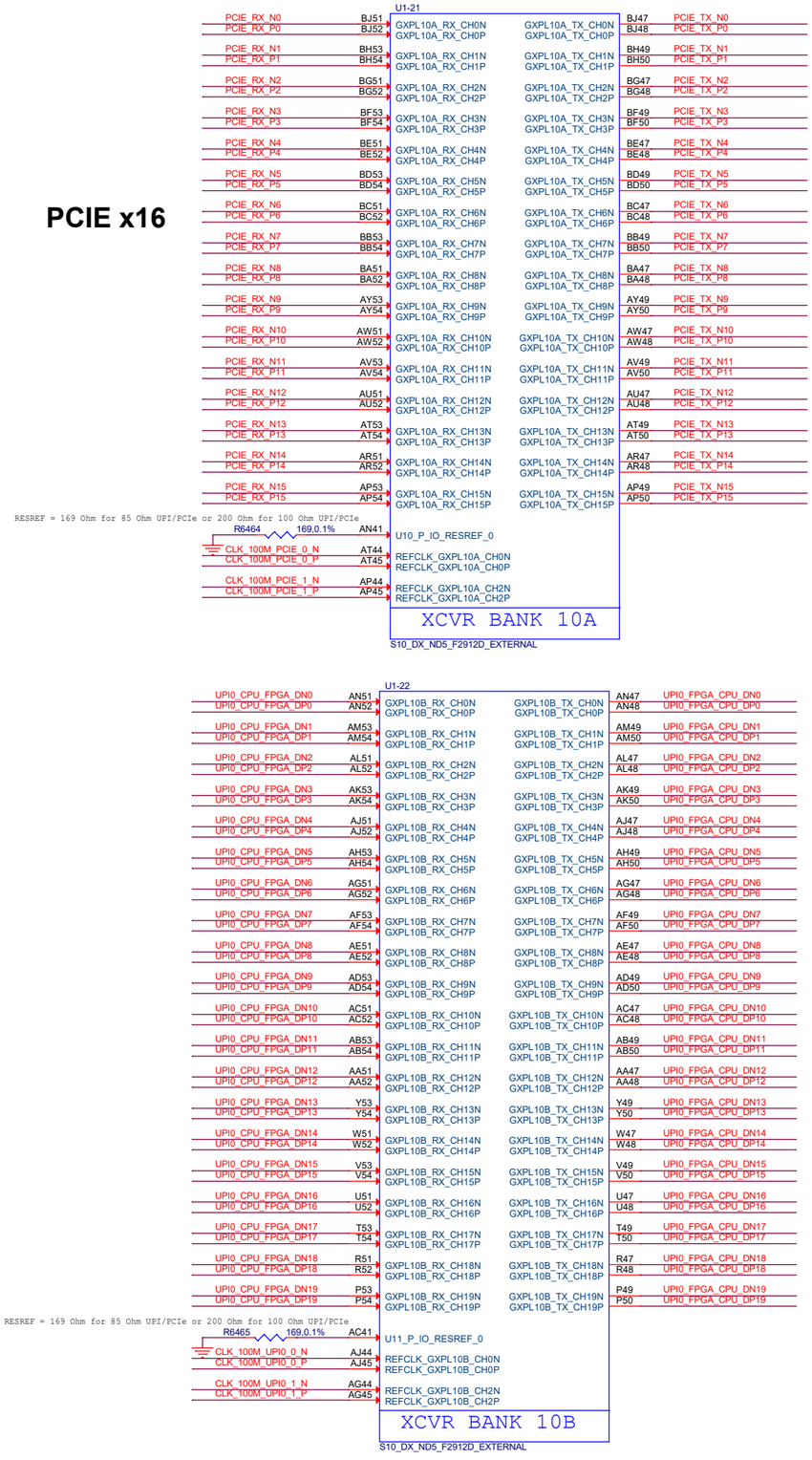

PCIE x16

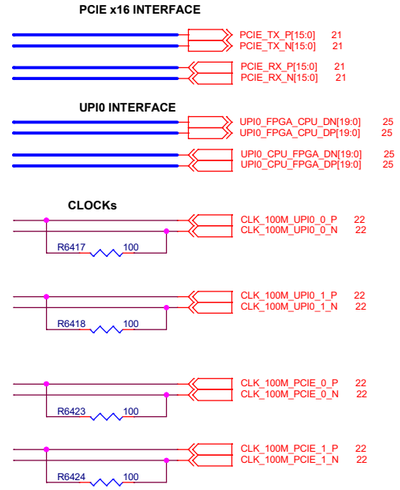

Intel Corporation, 101 Innovation Dr., San Jose CA 95134
Copyright (c) 2016, Intel Corporation. All Rights Reserved.

Title: Stratix 10 DX FPGA DEVKIT Board

Size	Document Number	Rev
C	150-0330653-A (K49172-001)	A

Date: Friday, May 24, 2019 Sheet 15 of 69

S10 DX Xcvr GXPR 11B, 11C

UPI_1 CPU->FPGA

UPI_1 FPGA->CPU

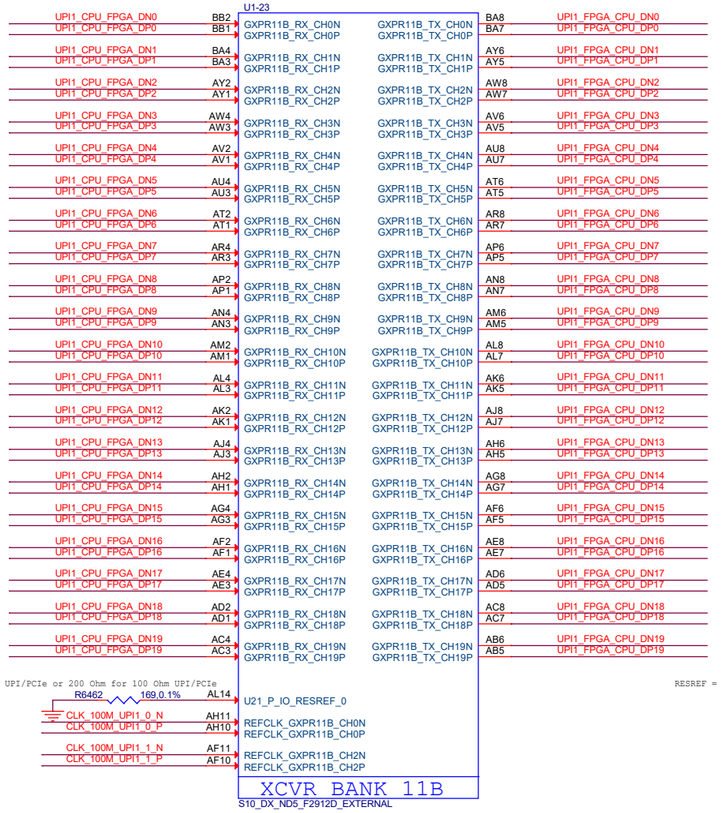

UPI_2 CPU->FPGA

UPI_2 FPGA->CPU

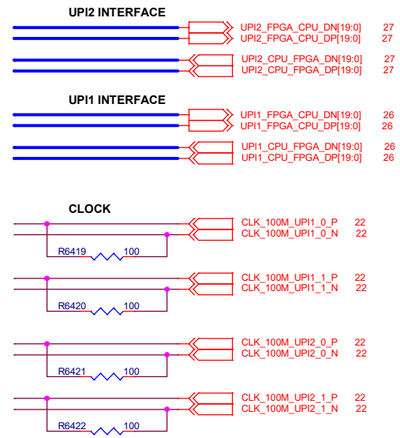

Intel Corporation, 101 Innovation Dr., San Jose CA 95134
Copyright (c) 2016, Intel Corporation. All Rights Reserved.

Title	Stratix 10 DX FPGA DEVKIT Board	
Size C	Document Number 150-0330653-A (K49172-001)	Rev A
Date: Friday, May 24, 2019	Sheet 16 of 69	

S10 DX Bank WHR

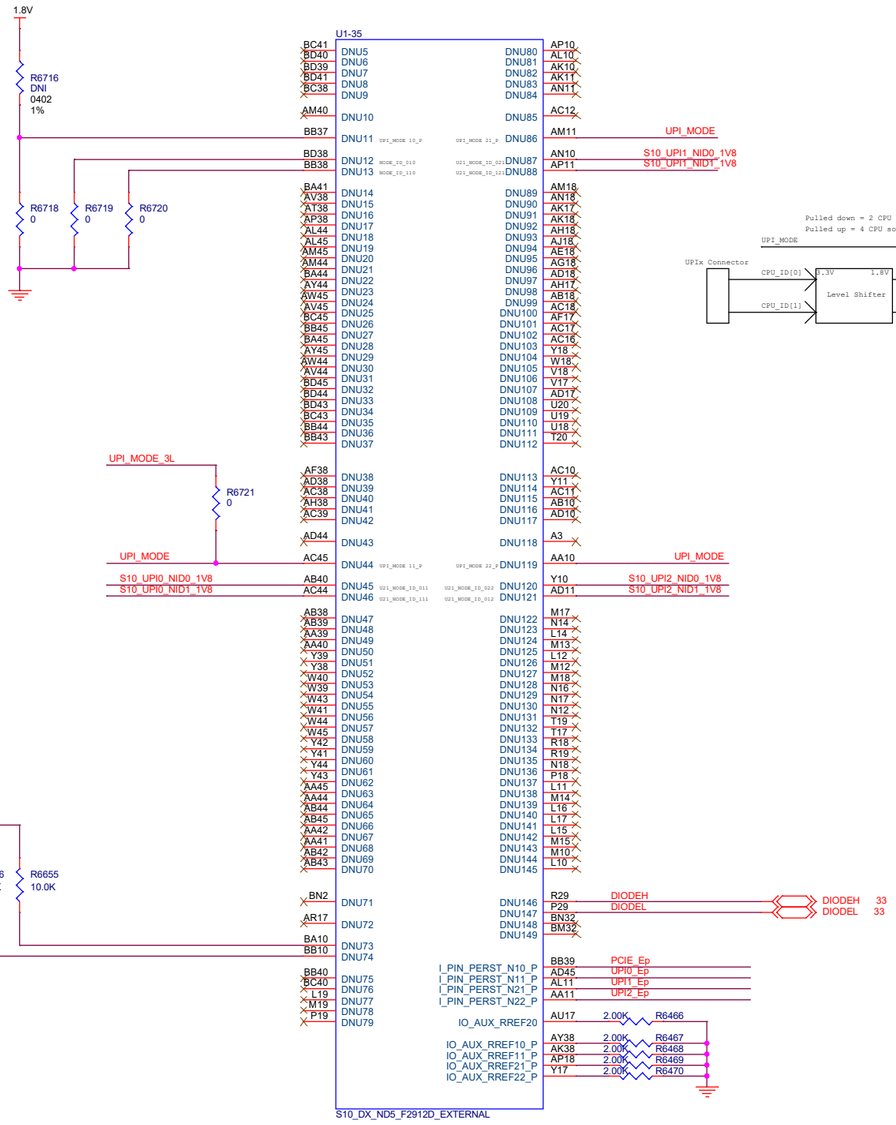

Intel Corporation, 101 Innovation Dr., San Jose CA 95134
Copyright (c) 2016, Intel Corporation. All Rights Reserved.

Title	Stratix 10 DX FPGA DEVKIT Board	
Size: C	Document Number: 150-0330653-A (K49172-001)	Rev: A
Date: Friday, May 24, 2019	Sheet 17 of 69	

Reset Tree

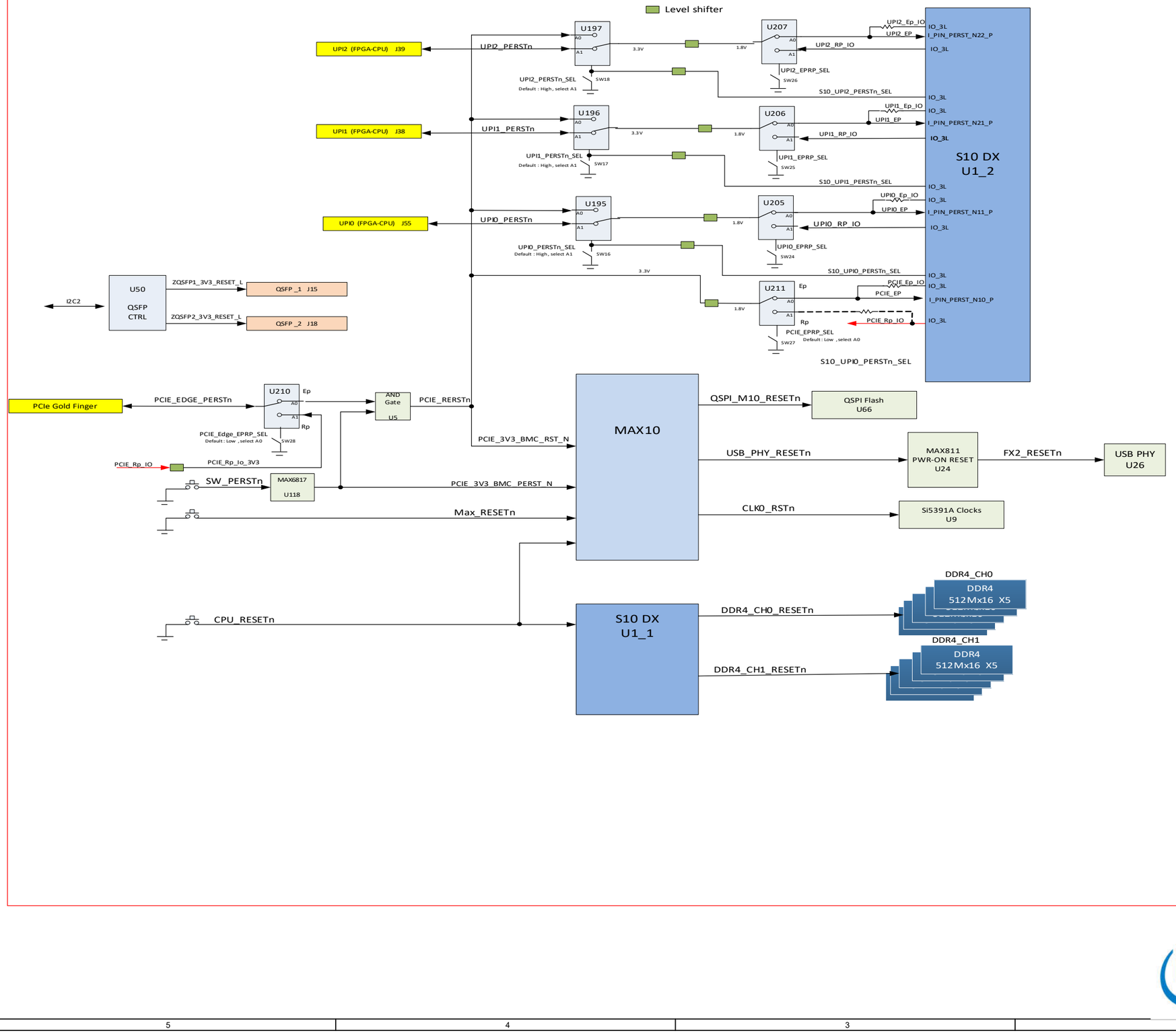

Intel Corporation, 101 Innovation Dr., San Jose CA 95134
Copyright (c) 2016, Intel Corporation. All Rights Reserved.

Title	Stratix 10 DX FPGA DEVKIT Board	
Size: B	Document Number: 150-0330653-A (K49172-001)	Rev: A
Date: Friday, May 24, 2019	Sheet 18 of 69	

S10 DX Power

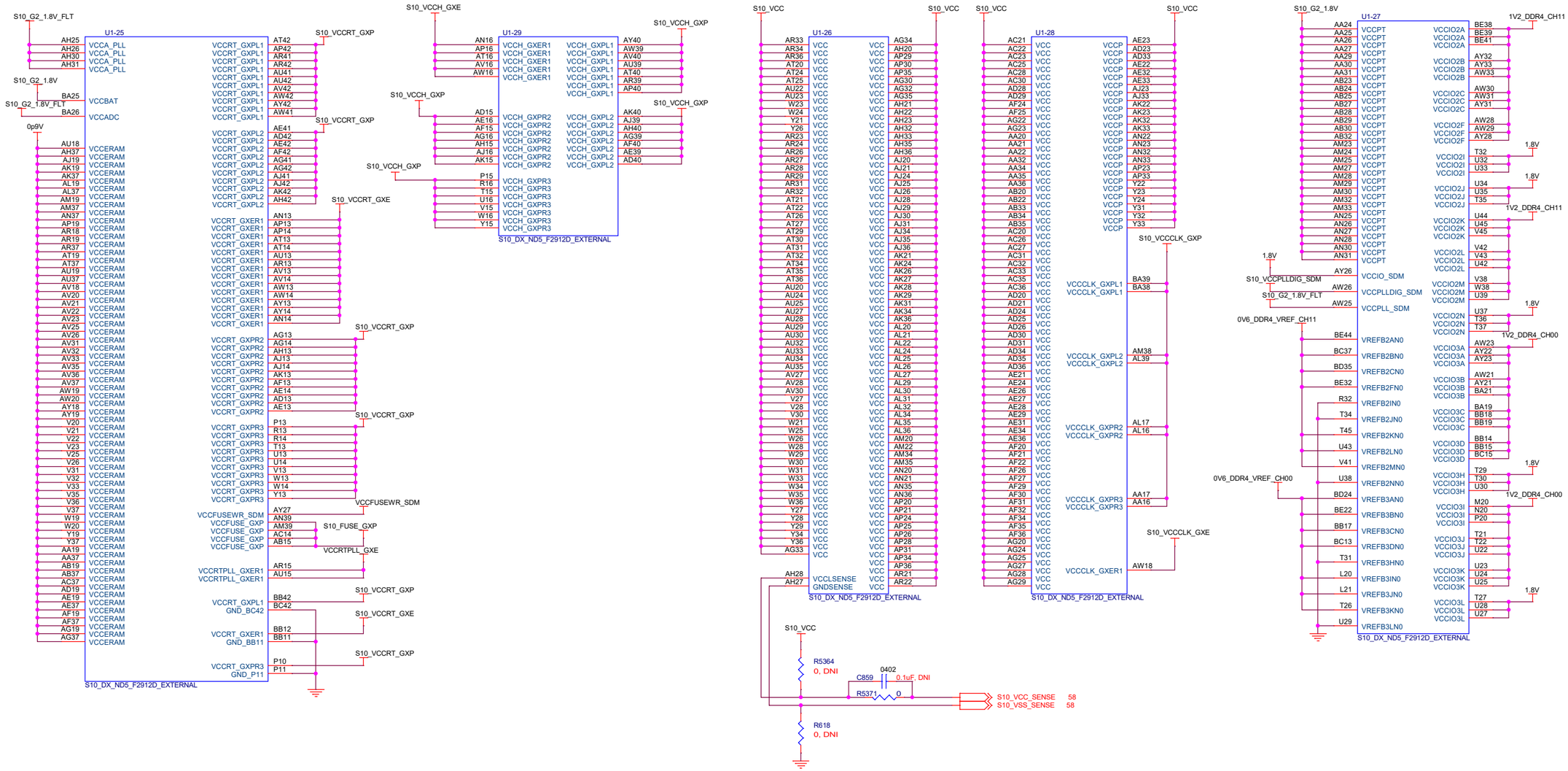

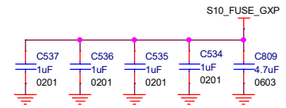

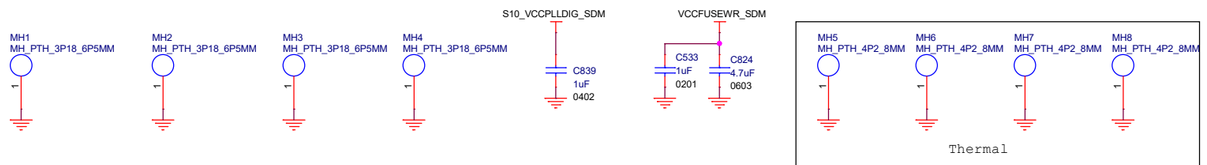

Intel Corporation, 101 Innovation Dr., San Jose CA 95134
Copyright (c) 2016, Intel Corporation. All Rights Reserved.

Title: **Stratix 10 DX FPGA DEVKIT Board**

Size	Document Number	Rev
C	150-0330653-A (K49172-001)	A

Date: Friday, May 24, 2019 Sheet 19 of 69

S10 DX Ground

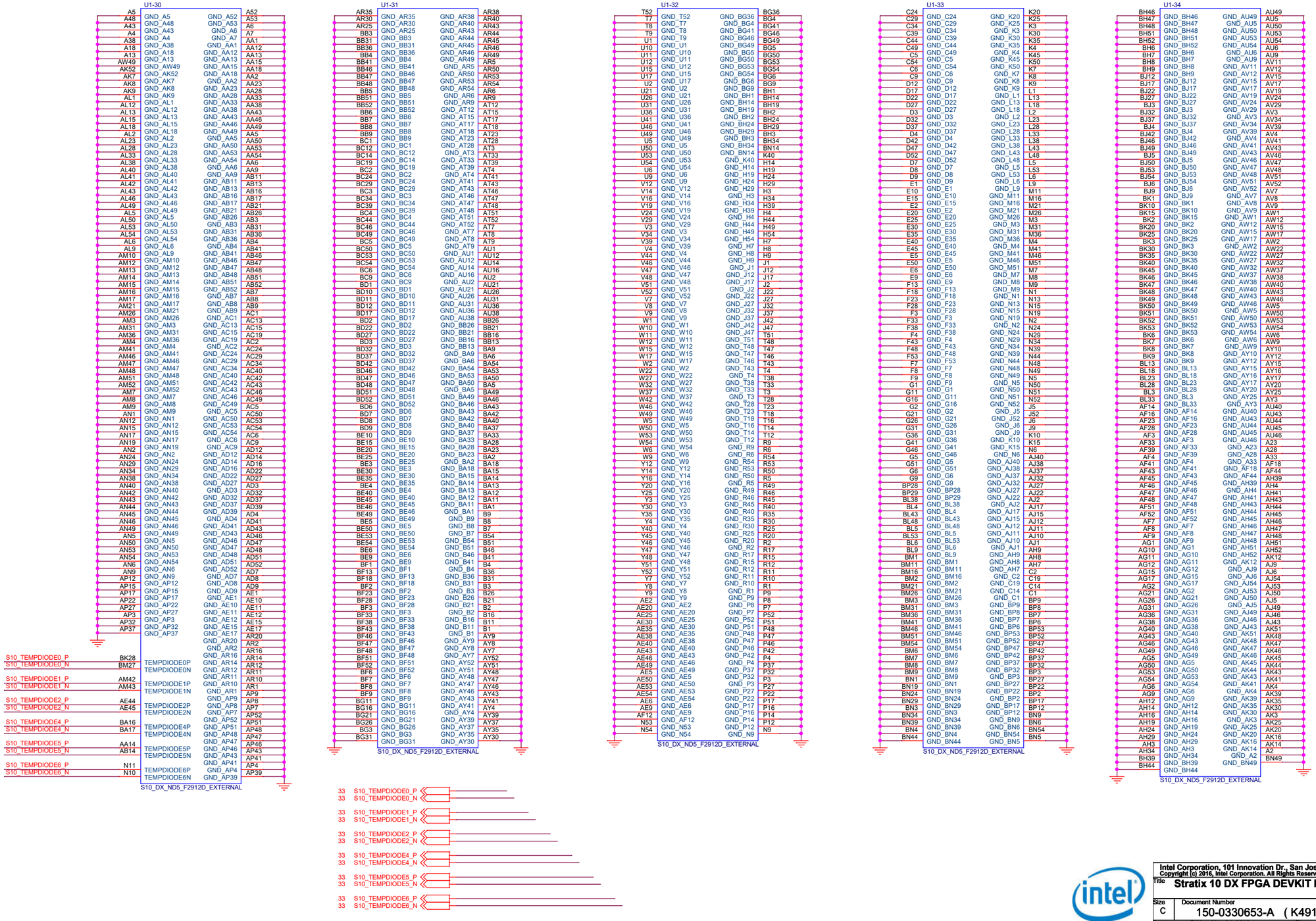

Intel Corporation, 101 Innovation Dr., San Jose CA 95134
Copyright (c) 2016, Intel Corporation. All Rights Reserved.

Title: Stratix 10 DX FPGA DEVKIT Board

Size	Document Number	Rev
C	150-0330653-A (K49172-001)	A

Date: Friday, May 24, 2019 Sheet 20 of 69

PCIe Edge x16 Gold Fingers

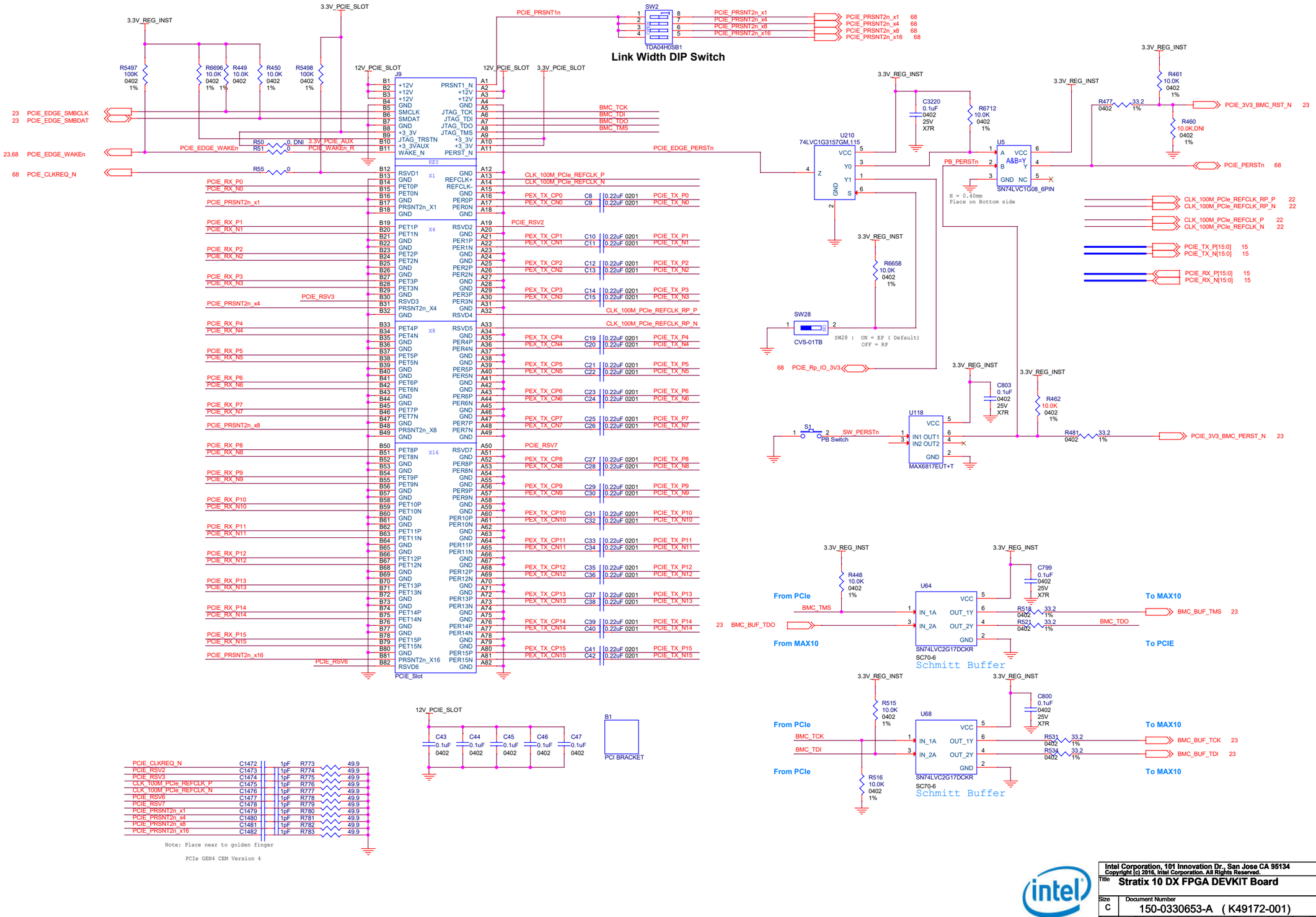

Intel Corporation, 101 Innovation Dr., San Jose CA 95134
Copyright (c) 2016, Intel Corporation. All Rights Reserved.

Title	Stratix 10 DX FPGA DEVKIT Board	
Size: C	Document Number: 150-0330653-A (K49172-001)	Rev: A
Date: Friday, May 24, 2019	Sheet 21 of 69	

Board System Clocks

IN_SEL[1:0]		Selected Input
0	0	IN0
0	1	IN1
1	0	IN2
1	1	XA/XB

CLKIN_SEL[1]	CLKIN_SEL[0]	PLL INPUT
LOW	LOW	DISABLED
LOW	HIGH	XA/XB
HIGH	LOW	CLKIN2
HIGH	HIGH	CLKIN1 (DEFAULT)

SW SELECT	INPUT CHANNEL
POS 1	A (default)
POS 2	B

SW14 PCIe REFCLK/TEST CLK Select
OFF = PCIe REFCLK (Default)
ON = 100MHz TEST REFCLK

I2C Address = 0x74

I2C ADDR = D8H

Bypass Mode

Custom Programmed:
INPUT1=CLKIN_SEL[0]
INPUT2=CLKIN_SEL[1]
I2C addres = 0x6A (Default)

LVDS 3.3V 100 MHz INPUT
HCSL 3.3V 100MHz INPUT

Provides Bench Testing

HCSL 3V3 100MHz

Intel Corporation, 101 Innovation Dr., San Jose CA 95134
Copyright (c) 2016, Intel Corporation. All Rights Reserved.
Title: Stratix 10 DX FPGA Hollister Ridge Board

Size	Document Number	Rev
Custom	150-0330653-A (K49172-001)	A

Date: Thursday, May 30, 2019 Sheet 22 of 69

Max 10 System Controller

AVST_READY must be double registered inside MAX10 for syncronization to AVST_CLK

U11-4 — 1.8V

AVST8_DATA0	P4	IO_3_P4/DIFFIO_TX_RX_B1N
AVST8_DATA1	P2	IO_3_P2/DIFFIO_RX_B2N
AVST8_DATA2	N5	IO_3_N5/DIFFIO_TX_RX_B1P
AVST8_DATA3	R1	IO_3_R1/DIFFIO_RX_B2P
AVST8_DATA4	M6	IO_3_M6/DIFFIO_TX_RX_B3N
AVST8_DATA5	R3	IO_3_R3/DIFFIO_RX_B4N
AVST8_DATA6	L7	IO_3_L7/DIFFIO_TX_RX_B3P
AVST8_DATA7	R2	IO_3_R2/DIFFIO_RX_B4P
AVST8_CLK R72 10	R4	IO_3_R4/DIFFIO_TX_RX_B5N
AVST8_READY	T3	IO_3_T3/DIFFIO_RX_B6N
AVST8_VALID	P5	IO_3_P5/DIFFIO_TX_RX_B5P
CPU_RESETn	T2	IO_3_T2/DIFFIO_RX_B6P
FPGA_1V8_nCONFIG	R6	IO_3_R6/DIFFIO_TX_RX_B13N
FPGA_1V8_nSTATUS	T5	IO_3_T5/DIFFIO_RX_B14N
FPGA_1V8_INIT_DONE	R5	IO_3_R5/DIFFIO_TX_RX_B13P
FPGA_1V8_CONF_DONE	T4	IO_3_T4/DIFFIO_RX_B14P
USB_FPGA_CLK	M7	IO_3_M7/DIFFIO_TX_RX_B15N
UPI_MODE	L8	IO_3_L8/DIFFIO_TX_RX_B15P
S10_1V8_TDI	T6	IO_3_T6
S10_1V8_TMS	R7	IO_3_R7/DIFFIO_TX_RX_B16N
S10_1V8_TCK	T8	IO_3_T8/DIFFIO_RX_B17N
S10_1V8_TDO	P6	IO_3_P6/DIFFIO_TX_RX_B16P
FPGA_PR_ERROR	R8	IO_3_R8/DIFFIO_RX_B17P
FPGA_PR_DONE	T9	IO_3_T9/DIFFIO_RX_B19N
FPGA_PR_REQUEST	R9	IO_3_R9/DIFFIO_RX_B19P
QSPI_AVST_SEL	T11	IO_3_T11/DIFFIO_TX_RX_B22N
MSEL2	R10	IO_3_R10/DIFFIO_TX_RX_B22P

10M50DAF256C7G

U11-2 — 3.3V

FX2_PA0	F5	IO_1A_F5/ADC1IN1/DIFFIO_RX_L1N
FX2_PA1	C4	IO_1A_C4/ADC2IN1/DIFFIO_RX_L2N
FX2_PA2	F4	IO_1A_F4/ADC1IN2/DIFFIO_RX_L1P
FX2_PA3	C3	IO_1A_C3/ADC2IN8/DIFFIO_RX_L2P
FX2_PA4	H5	IO_1A_H5/ADC1IN3/DIFFIO_RX_L3N
FX2_PA5	E3	IO_1A_E3/ADC2IN3/DIFFIO_RX_L4N
FX2_PA6	G5	IO_1A_G5/ADC1IN4/DIFFIO_RX_L3P
FX2_PA7	F2	IO_1A_F2/ADC2IN4/DIFFIO_RX_L4P
FX2_PB0	G2	IO_1A_G2/ADC1IN5/DIFFIO_RX_L5N
FX2_PB1	C2	IO_1A_C2/ADC2IN5/DIFFIO_RX_L6N
FX2_PB2	F1	IO_1A_F1/ADC1IN6/DIFFIO_RX_L5P
FX2_PB3	B2	IO_1A_B2/ADC2IN6/DIFFIO_RX_L6P
FX2_PB4	E1	IO_1A_E1/ADC1IN7/DIFFIO_RX_L7N
FX2_PB5	B1	IO_1A_B1/ADC2IN7/DIFFIO_RX_L8N
FX2_PB6	D1	IO_1A_D1/ADC1IN8/DIFFIO_RX_L7P
FX2_PB7	C1	IO_1A_C1/ADC2IN2/DIFFIO_RX_L8P
FX2_FLAGA	J5	IO_1B_J5/DIFFIO_RX_L20N
FX2_FLAGB	H6	IO_1B_H6/DIFFIO_RX_L20P
FX2_FLAGC	J3	IO_1B_J3/DIFFIO_RX_L22N
FX2_RESETn	J2	IO_1B_J2/DIFFIO_RX_L22P

10M50DAF256C7G

U11-3 — 3.3V

	N3	IO_2_N3/PLL_L_CLKOUTN/DIFFIO_RX_L59N
	N4	IO_2_N4/PLL_L_CLKOUTP/DIFFIO_RX_L59P
EXT_UBII_TCK	L1	
EXT_UBII_TDO	K2	IO_2_L1/DIFFIO_RX_L29N
EXT_UBII_TMS	M2	IO_2_K2/DIFFIO_RX_L29P
EXT_UBII_TDI	L2	IO_2_M2/DIFFIO_RX_L37N
FX2_PD4	N1	IO_2_L2/DIFFIO_RX_L37P
FX2_PD5	K5	IO_2_N1
USB_DISABLEn	L6	IO_2_K5/DIFFIO_RX_L41N
		IO_2_L6/DIFFIO_RX_L41P

10M50DAF256C7G

U11-5 — 3.3V

USB_PHY_RESETn	M11	IO_4_M11/PLL_B_CLKOUTN/DIFFIO_TX_RX_B57N
VCCH_GXPEN	L10	IO_4_L10/PLL_B_CLKOUTP/DIFFIO_TX_RX_B57P
I2C2_SCL R320 0	P10	
I2C2_SDA R322 0	R11	IO_4_P10/DIFFIO_TX_RX_B34N
VCCH_GXE_EN	P11	IO_4_R11/DIFFIO_RX_B35N
OVERTEMPn	R12	IO_4_P11/DIFFIO_TX_RX_B34P
TSENSE_ALERTn	M10	IO_4_R12/DIFFIO_RX_B35P
BMC_BUF_TDO	L9	IO_4_M10/DIFFIO_TX_RX_B36N
BMC_BUF_TMS	T12	IO_4_L9/DIFFIO_TX_RX_B36P
2.5V_DDR4_CH11_EN	P13	IO_4_T12
	P12	IO_4_P13/DIFFIO_TX_RX_B37N
		IO_4_P12/DIFFIO_TX_RX_B37P

10M50DAF256C7G

MAX16550 HSC interface

AUX2_HSC_FAULT_N	49	
AUX2_HSC_ALERT_N	49	
PCIE_HSC_FAULT_N	55	
PCIE_HSC_ALERT_N	55	
TWARN_0V89_FPGA	58	

ENABLE VREF DDR4

0V6_DDR4_VREF_CH00_EN	65	
0V6_DDR4_VREF_CH11_EN	65	

IO Expander to MAX10

VCCcore AVS Bus

AVS_CLK	58	
AVS_MDA	58	
AVS_SDA	58	
PCIE_3V3_BMC_RST_N	21	
MAX10_PS_ON	49	

U11-10 — 3.3V / 1.8V / 3.3V

FX2_PD6	M3	IO_2_M3/CLK0N/DIFFIO_RX_L28N
FX2_PD7	L3	IO_2_L3/CLK0P/DIFFIO_RX_L28P
FX2_SCL	J6	IO_2_J6/CLK1N/DIFFIO_RX_L36N
FX2_SDA	K6	IO_2_K6/CLK1P/DIFFIO_RX_L36P
FX2_SLRDn	N2	IO_2_N2/DPCLK0/DIFFIO_RX_L38N
FX2_SLWRn	P1	IO_2_P1/DPCLK1/DIFFIO_RX_L38P
MSEL1	P9	IO_3_P9/CLK6N/DIFFIO_TX_RX_B18N
CLK_125M_LVC1_MAX10	P8	IO_3_P8/CLK6P/DIFFIO_TX_RX_B18P
	M8	IO_3_M8/CLK7N/DIFFIO_TX_RX_B20N
CLK_MAX10_50M	M9	IO_3_M9/CLK7P/DIFFIO_TX_RX_B20P
I2C3_SDA	J11	IO_6_J11/CLK2P/DIFFIO_RX_R38P
I2C3_SCL	J12	IO_6_J12/CLK2N/DIFFIO_RX_R38N
USB_T_CLK	J15	IO_6_J15/CLK3P/DIFFIO_RX_R40P
I2C1_SCL	J16	IO_6_J16/CLK3N/DIFFIO_RX_R40N
I2C1_SDA	G11	IO_6_G11/DPCLK3/DIFFIO_RX_R50P/DQS2R
MAX10_DATA3 R392 0	G12	IO_6_G12/DPCLK2/DIFFIO_RX_R50N/DQS2N
FPGA_CONF_DONE_LED	D9	IO_8_D9/CLK4P/DIFFIO_RX_T38P
	C9	IO_8_C9/CLK4N/DIFFIO_RX_T38N
BMC_BUF_TCK	F9	IO_8_F9/DIFFIO_RX_T40P
BMC_BUF_TDI	E9	IO_8_E9/CLK5N/DIFFIO_RX_T40N
	J1	
PCIE_3V3_BMC_RST_N	M1	IO_1B_J1/VREFB1N0
MSEL0	T7	IO_2_M1/VREFB2N0
	T13	IO_3_T7/VREFB3N0
M10_GPIO0 R395 0	R16	IO_4_T13/VREFB4N0
0V6_DDR4_VREF_CH00_EN	B15	IO_5_R16/VREFB5N0
0V6_DDR4_VREF_CH11_EN	A15	IO_8_B15/VREFB6N0
TWARN_0V89_FPGA	A9	IO_7_A15/VREFB7N0
		IO_8_A9/VREFB8N0

10M50DAF256C7G

U11-7 — 3.3V

2.5V_DDR4_CH11_PG	D14	IO_6_D14/PLL_R_CLKOUTP/DIFFIO_RX_R69P
PCIE_EDGE_WAKEn	C14	IO_6_C14/PLL_R_CLKOUTN/DIFFIO_RX_R69N
AUX2_HSC_MAX10_PG	J14	
PCIE_HSC_MAX10_PG	K15	IO_6_J14/DIFFIO_RX_R39P
3.3V_REG_INST_PG	H15	IO_6_K15/DIFFIO_RX_R39N
VCC_PG	H16	IO_6_H15/DIFFIO_RX_R41P
VCCERAM_PG	D16	IO_6_H16/DIFFIO_RX_R41N
VCCH_GXE_PG	C16	IO_6_D16/DIFFIO_RX_R42P
VCCH_GXP_PG	H11	IO_6_C16/DIFFIO_RX_R42N
1.8V_PG	H12	IO_6_H11/DIFFIO_RX_R44P/DQ2R
3.3V_REG_PG	G14	IO_6_H12/DIFFIO_RX_R44N/DQ2R
2.5V_DDR4_CH00_PG	G16	IO_6_G14/DIFFIO_RX_R46P/DQ2R
VCCFUSE_PG	G15	IO_6_G16/DIFFIO_RX_R47P/DQ2R
DDR4_CH00_PG	F16	IO_6_G15/DIFFIO_RX_R46N/DM2R
DDR4_CH11_PG	B16	IO_6_F16/DIFFIO_RX_R47N/DQ2R
VCCIO_1V8_PG	F14	IO_6_B16
PCIE_EDGE_SMBCLK	E15	IO_6_F14/DIFFIO_RX_R51P/DQ2R
PCIE_EDGE_SMBDAT	E16	IO_6_E15/DIFFIO_RX_R52P/DQ2R
FAN_TACH	E16	IO_6_E14/DIFFIO_RX_R51N/DQ2R
0V6_DDR4_VREF_CH00_PG	D15	IO_6_E16/DIFFIO_RX_R52N/DQ2R
0V6_DDR4_VREF_CH11_PG	C15	IO_6_D15/DIFFIO_RX_R70P/CK_6
		IO_6_C15/DIFFIO_RX_R70N/CK#_6

10M50DAF256C7G

U11-8 — 3.3V

SPI_CS#	D12	IO_7_D12/DIFFIO_RX_T1P
SPI_CLK	C13	IO_7_C13/DIFFIO_RX_T2P
SPI_DQ0	E11	IO_7_E11/DIFFIO_RX_T1N
SPI_DQ1	C12	IO_7_C12/DIFFIO_RX_T2N
M10_CLK R6088 0	F11	IO_7_F11/DIFFIO_RX_T17P
M10_GPIO1 R6089 0	A14	IO_7_A14
CLK0_LOL	F12	IO_7_F12/DIFFIO_RX_T17N
SPI_DQ2	E10	IO_7_E10/DIFFIO_RX_T28P
SPI_DQ3	B13	IO_7_B13/DIFFIO_RX_T30P
	A13	IO_7_A13/DIFFIO_RX_T30N

10M50DAF256C7G

U11-6 — 3.3V

M10_DATA3 R394 0	P14	IO_5_P14/RUP/DIFFIO_RX_R1P
M10_SSN R393 0	R14	IO_5_R14/RDN/DIFFIO_RX_R1N
VCC_EN R5581 20	T14	IO_5_T14/DIFFIO_RX_R2P
VCCERAM_EN R197 20	T15	IO_5_T15/DIFFIO_RX_R2N
PWRGD_OUT R6597 0	L11	IO_5_L11/DIFFIO_RX_R25P/DQ1R
VCCR1_GXE_EN R199 20	L12	IO_5_L12/DIFFIO_RX_R25N/DQ1R
1.8V_EN R200 20	N14	IO_5_N14/DIFFIO_RX_R27P/DQ1R
3.3V_REG_EN R6073 20	M15	IO_5_M15/DIFFIO_RX_R28P/DQ1R
DDR4_CH00_EN R6077 20	P15	IO_5_P15/DIFFIO_RX_R27N/DM1R
DDR4_CH11_EN R6080 20	M14	IO_5_M14/DIFFIO_RX_R28N/DQ1R
2.5V_DDR4_CH00_EN R6084 20	N16	IO_5_N16/DIFFIO_RX_R29P
VCCFUSE_EN R505 20	R15	IO_5_R15
VCCIO_1V8_EN R528 20	P16	IO_5_P16/DIFFIO_RX_R29N
CLK0_RSTn	K11	IO_5_K11/DIFFIO_RX_R30P/DQ1R
	K12	IO_5_K12/DIFFIO_RX_R30N/DQ1R
VCCCLK_GXE_EN R6256 20	K14	IO_5_K14/DIFFIO_RX_R32P/DQS1R
MAX10_PS_ON	M16	IO_5_M16/DIFFIO_RX_R33P/DQ1R
M10_DATA0 R388 0	L15	IO_5_L15/DIFFIO_RX_R32N/DQSN1R
M10_DATA2 R389 0	L16	IO_5_L16/DIFFIO_RX_R33N/DQ1R

10M50DAF256C7G

U11-9 — 3.3V

FAN_PWM	B3	IO_8_B3/PLL_T_CLKOUTP/DIFFIO_RX_T52P
MAX_RESETN	A4	IO_8_A4/PLL_T_CLKOUTN/DIFFIO_RX_T52N
MAX_CONF_DONE	B12	
	B11	IO_8_B12/DIFFIO_RX_T41P
AVS_SDA R89 0	C10	IO_8_B11/DIFFIO_RX_T41N
CLK0_OEN	A11	IO_8_C10/DIFFIO_RX_T42P
USB_MAX_JTAGSEL	A12	IO_8_A11/DIFFIO_RX_T43P
QSPI_M10_RESETN	A10	IO_8_A12/DIFFIO_RX_T43N
QSPI_M10_CLK	B7	IO_8_A10
QSPI_M10_CS_N	B9	IO_8_B7/DIFFIO_RX_T44N
QSPI_M10_DATA0	A8	IO_8_B9/DIFFIO_RX_T45P
QSPI_M10_DATA1	B6	IO_8_A8/DIFFIO_RX_T45N
QSPI_M10_DATA2	A7	IO_8_B6/DIFFIO_RX_T46P
QSPI_M10_DATA3	C6	IO_8_A7/DIFFIO_RX_T47P
AUX2_HSC_FAULT_N	A6	IO_8_C6/DIFFIO_RX_T46N
AUX2_HSC_ALERT_N	B5	IO_8_A6/DIFFIO_RX_T47N
PCIE_HSC_FAULT_N	B4	IO_8_B5/DIFFIO_RX_T48P
PCIE_HSC_ALERT_N	A5	IO_8_A5/DIFFIO_RX_T49N
AVS_MDA R90 0	A3	IO_8_A3/DIFFIO_RX_T51P
AVS_CLK R86 0	A2	IO_8_A2/DIFFIO_RX_T51N

10M50DAF256C7G

MAX10_VCCIO_1.8V

R406 10.0K — X4 (EN, VCC, GND, OUT) — 125MHz — ECS-3518-1250-B-TR — R300 22.0 CLK_125M_LVC1_MAX10 — C316 2.2uF 0603 — C411 0.1uF 0402

3.3V_REG_INST

R429	10.0K	AUX2_HSC_MAX10_PG 49
R430	10.0K	PCIE_HSC_MAX10_PG 55
R432	10.0K	3.3V_REG_INST_PG 63
R434	10.0K	VCCERAM_PG 62
R437	10.0K	1.8V_PG 50
R433	10.0K	VCC_PG 58
R438	10.0K	3.3V_REG_PG 63
R439	10.0K	2.5V_DDR4_CH00_PG 65
R440	10.0K	VCCFUSE_PG 64
R441	10.0K	DDR4_CH00_PG 67
R442	10.0K	DDR4_CH11_PG 66
R443	10.0K	VCCIO_1V8_PG 51
R444	10.0K	0V6_DDR4_VREF_CH00_PG 65
R445	10.0K	0V6_DDR4_VREF_CH11_PG 65
R6252	10.0K	2.5V_DDR4_CH11_PG 65
R6253	10.0K	VCCCLK_GXE_PG 46
R6287	10.0K	VCCH_GXP_PG 45
R6288	10.0K	VCCH_GXE_PG 44
R6708	10.0K	MAX10_NCONFIG
R6709	10.0K	MAX10_NSTATUS
R5490	10.0K	MAX10_CONF_DONE

3.3V_REG_INST

R6703 10.0K — MAX10_CONFIG_SEL

R513	4.70K	0402	1%
R511	4.70K	0402	1%
R510	4.70K	0402	1%
R6439	4.70K	0402	1%
R6440	4.70K	0402	1%
R6441	4.70K	0402	1%
R6442	4.70K	0402	1%
R6443	4.70K	0402	1%
R6444	10.0K	DNI	
R6445	10.0K	DNI	
R6446	10.0K	DNI	
R6447	10.0K	DNI	
R6448	10.0K	DNI	
R6449	10.0K	DNI	
R6450	10.0K	DNI	
R6451	10.0K	DNI	
R6704	10.0K	DNI	

M10_DATA[3:0] 68 — M10_SSN 68 — M10_CLK 68 — M10_GPIO1 68 — M10_GPIO0 68 — PWRGD_OUT 31

MAX10_CONFIG_SEL — M10_DATA0 — M10_DATA1 — M10_DATA2 — M10_DATA3 — M10_SSN — M10_CLK — M10_GPIO1 — M10_GPIO0

PULL UP/DOWN OPTIONS FOR BUS CONFIGURATION BETWEEN MAX10 AND FPGA

PGM CONFIG & PGM SEL ONLY FOR DEBUG

U11-11 — 3.3V

MAX10_JTAGEN	G6	IO_1B_G6/JTAGEN
USB_MAX_TMS	H2	IO_1B_H2/TMS/DIFFIO_RX_L17N
USB_MAX_TCK	H1	IO_1B_H3/TCK/DIFFIO_RX_L17P
USB_MAX_TDO	G1	IO_1B_G1/TDI/DIFFIO_RX_L18N
JTAG_INPUT_SOURCE	H1	IO_1B_H1/TDO/DIFFIO_RX_L18P
	B10	IO_8_B10/DEV_CLRN/DIFFIO_RX_T42N
MAX10_CONFIG_SEL	B8	IO_8_B8/DEV_OE/DIFFIO_RX_T44P
MAX10_NCONFIG	F8	IO_8_F8/CONFIG_SEL
PCIE_3V3_BMC_PERST_N	E8	INPUT_ONLY_8_E8/NCONFIG
MAX10_NSTATUS	C5	IO_8_C5/CRC_ERROR/DIFFIO_RX_T48N
MAX10_CONF_DONE	F7	IO_8_F7/NSTATUS/DIFFIO_RX_T50P
	E7	IO_8_E7/CONF_DONE/DIFFIO_RX_T50N

10M50DAF256C7G

MAX10_VCC_1.2V

U11-1

	K8	VCC__K8
	K10	VCC__K10
	J9	VCC__J9
	J8	VCC__J8
	J7	VCC__J7
	H9	VCC__H9
	H8	VCC__H8
	H10	VCC__H10
	G9	VCC__G9
	G7	VCC__G7
	F6	VCCINT__F6
	M5	VCCD_PLL1__M5
	D13	VCCD_PLL2__D13
	D4	VCCD_PLL3__D4
	N13	VCCD_PLL4__N13
	H4	VCCIO1A__H4
	G4	VCCIO1A__G4
	J4	VCCIO1B__J4
	L4	VCCIO2__L4
	K4	VCCIO2__K4
	N8	VCCIO3__N8
	N7	VCCIO3__N7
	N6	VCCIO3__N6
	N11	VCCIO3__N11
	N10	VCCIO4__N10
	M13	VCCIO5__M13
	L13	VCCIO5__L13
	K13	VCCIO5__K13
	J13	VCCIO6__J13
	H13	VCCIO6__H13
	G13	VCCIO6__G13
	F13	VCCIO6__F13
	D11	VCCIO7__D11
	D10	VCCIO7__D10
	D8	VCCIO8__D8
	D7	VCCIO8__D7
	C7	VCCIO8__C7
	L5	VCCA1__L5
	E12	VCCA2__E12
	D5	VCCA3__D5
	E5	VCCA_ADC__E5
	M12	VCCA4__M12
	E4	ADC_VREF__E4

10M50DAF256C7G

M10_VCCINT — M10_1V2_VCCDPLL — 3.3V_REG_INST

MAX10_VCCIO_1.8V — 3.3V_REG_INST

MAX10_VCC_1.2V — R297 10.0K — X3 (EN, VCC, GND, OUT) — 50MHz — ECS-3518-500-B-xx — R298 22.0 CLK_MAX10_50M — C315 2.2uF 0603 — C410 0.1uF 0402

MAX10_VCC_1.2V — P1V2

C627 100uF — C102 0.1uF — C103 0.1uF — C104 0.1uF — C105 0.1uF — C106 0.1uF — C107 0.1uF — C108 0.1uF — C109 0.1uF — C129 0.1uF — C2012 — 0402

MAX10_VCC_1.2V — M10_1V2_VCCDPLL — L4 BLM15AG221SN1 — C160 10uF 0603 — C131 0.1uF — C130 0.1uF — C134 0.1uF — C133 0.1uF — 0402

MAX10_VCC_1.2V — M10_VCCINT — L42 BLM15AG221SN1 — C128 0.1uF 0402 — 3.3V_REG_INST

MAX10_VCCA_2.5V — C161 10uF 0603 — C135 0.1uF — C132 0.1uF — C137 0.1uF — C136 0.1uF — C139 0.1uF — 0402

MAX10_VCCA_ADC_2.5V — C138 0.1uF — C141 0.1uF — C140 0.1uF — C143 0.1uF — C142 0.1uF — 0402

MAX10_VCCIO_1.8V — C176 10uF 0603 — C193 0.1uF — C174 0.1uF — 0402

3.3V_REG_INST — C166 10uF 0603 — C145 0.1uF — C144 0.1uF — C163 0.1uF — C162 0.1uF — C165 0.1uF — C164 0.1uF — 0402

3.3V_REG_INST — C173 0.1uF — C168 0.1uF — C167 0.1uF — C170 0.1uF — C169 0.1uF — C172 0.1uF — C171 0.1uF — 0402

MAX10_VCCIO_2.5V — MAX10_VCCA_2.5V — MAX10_VCCA_ADC_2.5V

L48 BLM15AG221SN1 — L49 BLM15AG221SN1 — TP3 TESTPOINT — ADC_VREF

3.3V_REG_INST

C3160 0.1uF 0402 25V X6S

U49 — TS3A5018RSSVR — UQFN-16

EXT_UBII_TCK	1	NO1	V+ 14
EXT_UBII_TMS	4	NO2	
EXT_UBII_TDI	8	NO3	COM1 2 — USB_MAX_TCK
EXT_UBII_TDO	11	NO4	COM2 5 — USB_MAX_TMS
			COM3 7 — USB_MAX_TDI
FX2_PD0(TCK)	16	NC1	COM4 10 — USB_MAX_TDO
FX2_PD1(TMS)	3	NC2	
FX2_PD2(TDI)	9	NC3	
FX2_PD3(TDO)	12	NC4	EN 13
USB_MAX_JTAGSEL	15	IN	GND 6

0 = NC <--> COM
1 = NO <--> COM

NIOS Flash

3.3V_REG_INST — R493 10.0K 0402 1% — R470 10.0K 0402 1%

C184 0.1uF 0402 25V X6S — VCC = 2.7V ~ 3.6V, Absmax = 4.6V — 3.3V_REG_INST — R6600 10.0K 0402 1%

U41 — W25Q64JVSSIM — 64M-Bit Serial Flash — WSOIC-8

SPI_CS#	1	CS	VCC 8
SPI_DQ1	2	DO/IO1	RST/HLD/IO3 7 — SPI_DQ3
SPI_DQ2	3	WP/IO2	CLK 6 — SPI_CLK
	4	GND	DI/IO0 5 — SPI_DQ0

SW33 Position — CLOSE(0) — OPEN(1)

1-8 : JTAG DEBUG MODE	Normal Mode1 (Default)	EXT BUII
2-7 : JTAG INPUT_SOURCE	PCIe BMC	On-Board UBII (Default)
3-6 : UPI MODE	2 Sockets (default)	4 Sockets
4-5 : MAX10 JTAG ENABLE	JTAG for MAX10 pass through	JTAG for MAX10 update

3.3V_REG_INST — 1.8V — R6698 10.0K 0402 1% — R6705 10.0K 0402 1%

3.3V_REG_INST — R203 1% 240 0402 — R6711 1% 240 0402 — SW33 — TDA04H0SB1

8	1	USB_MAX_JTAGSEL
7	2	JTAG_INPUT_SOURCE
6	3	UPI_MODE
5	4	MAX10_JTAGEN

R428 10.0K 0402 1% — R6710 10.0K 0402 1%

3.3V_REG_INST — 1uF X5R 25V 0402 — 0.1uF X7R 25V C48 C49 0402

R41 10.0K 0402 1% — USB_DISABLEn

J2 — 70247-1051

2	1	
4	3	EXT_UBII_TCK
6	5	EXT_UBII_TDO
8	7	EXT_UBII_TMS
10	9	EXT_UBII_TDI

3.3V_REG_INST — R16 10.0K,DNI 0402 1% — R37 10.0K 0402 1% — R40 10.0K 0402 1% — R44 4.70K

USB_DISABLEn = 0 : External JTAG
USB_DISABLEn = 1 : On-Board UBII/PCIe EP Edge

EXT UBII JTAG_Header

UPI

UPI_MODE 17 — PCIE_3V3_BMC_PERST_N 21

PWR SEQUENCE

VCC_EN	53,58
VCCERAM_EN	53,62
VCCRT_GXE_EN	53
1.8V_EN	50,53
3.3V_REG_EN	53,63
DDR4_CH00_EN	53,67
DDR4_CH11_EN	53,66
2.5V_DDR4_CH00_EN	53,65
VCCFUSE_EN	64
VCCH_GXP_EN	45,53
VCCH_GXE_EN	44,53
VCCCLK_GXE_EN	46,53
1.8V_EN	51,53
2.5V_DDR4_CH11_EN	53,65

BMC JTAG from PCIe Conn

BMC_BUF_TCK	21
BMC_BUF_TDI	21
BMC_BUF_TDO	21
BMC_BUF_TMS	21

S10 Jtag

S10_1V8_TMS	6
S10_1V8_TDO	6
S10_1V8_TDI	6
S10_1V8_TCK	6

CLOCK

USB_FPGA_CLK 9 — CLK0_LOL 22

I2C MASTER 1 AND 2

I2C1_SCL	42,49,55,63,68
I2C1_SDA	42,49,55,63,68
I2C2_SDA	6,7,22,69
I2C2_SCL	6,7,22,69
I2C3_SCL	7,33
I2C3_SDA	7,33

PCIe I2C

PCIE_EDGE_SMBCLK	21
PCIE_EDGE_SMBDAT	21
PCIE_EDGE_WAKEn	21,68

FAN CONTROL

TSENSE_ALERTn	33,68
OVERTEMPn	33
FAN_PWM	33
FAN_TACH	33

PUSH BUTTON INTERFACE

CPU_RESETn	9,31
MAX_RESETn	31
MAX_CONF_DONE	31
USB_PHY_RESETn	32
FPGA_CONF_DONE_LED	31

QSPI FLASH

QSPI_M10_DATA0	6
QSPI_M10_DATA1	6
QSPI_M10_DATA2	6
QSPI_M10_DATA3	6
QSPI_M10_CLK	6
QSPI_M10_CS_N	6
QSPI_M10_RESETN	6

MAX10 DIPSWITCH

CLK0_OEn 22 — CLK0_RSTn 22

FPGA S10 interface

FPGA_1V8_nCONFIG	6
FPGA_1V8_nSTATUS	6
FPGA_1V8_INIT_DONE	6
FPGA_1V8_CONF_DONE	6
MSEL0	6
MSEL1	6
MSEL2	6
FPGA_PR_ERROR	12
FPGA_PR_DONE	12
FPGA_PR_REQUEST	12

AVST x8

AVST8_DATA[0..7] 6 — AVST8_CLK 6 — AVST8_VALID 6 — AVST8_READY 6 — QSPI_AVST_SEL 6

USB Blaster II

FX2_PA[7:0]	32
FX2_PB[7:0]	32
FX2_PD[7:0]	32
USB_T_CLK	32
FX2_FLAGA	32
FX2_FLAGB	32
FX2_FLAGC	32
FX2_SLRDn	32
FX2_SLWRn	32
FX2_RESETn	32
FX2_SCL	32
FX2_SDA	32

Intel Corporation, 101 Innovation Dr., San Jose CA 95134
Copyright (c) 2016, Intel Corporation. All Rights Reserved.

Title: Stratix 10 DX FPGA DEVKIT Board

Size: Custom | Document Number: 150-0330653-A (K49172-001) | Rev: A

Date: Friday, May 24, 2019 | Sheet 23 of 69

S10DX Devkit Board Diagram

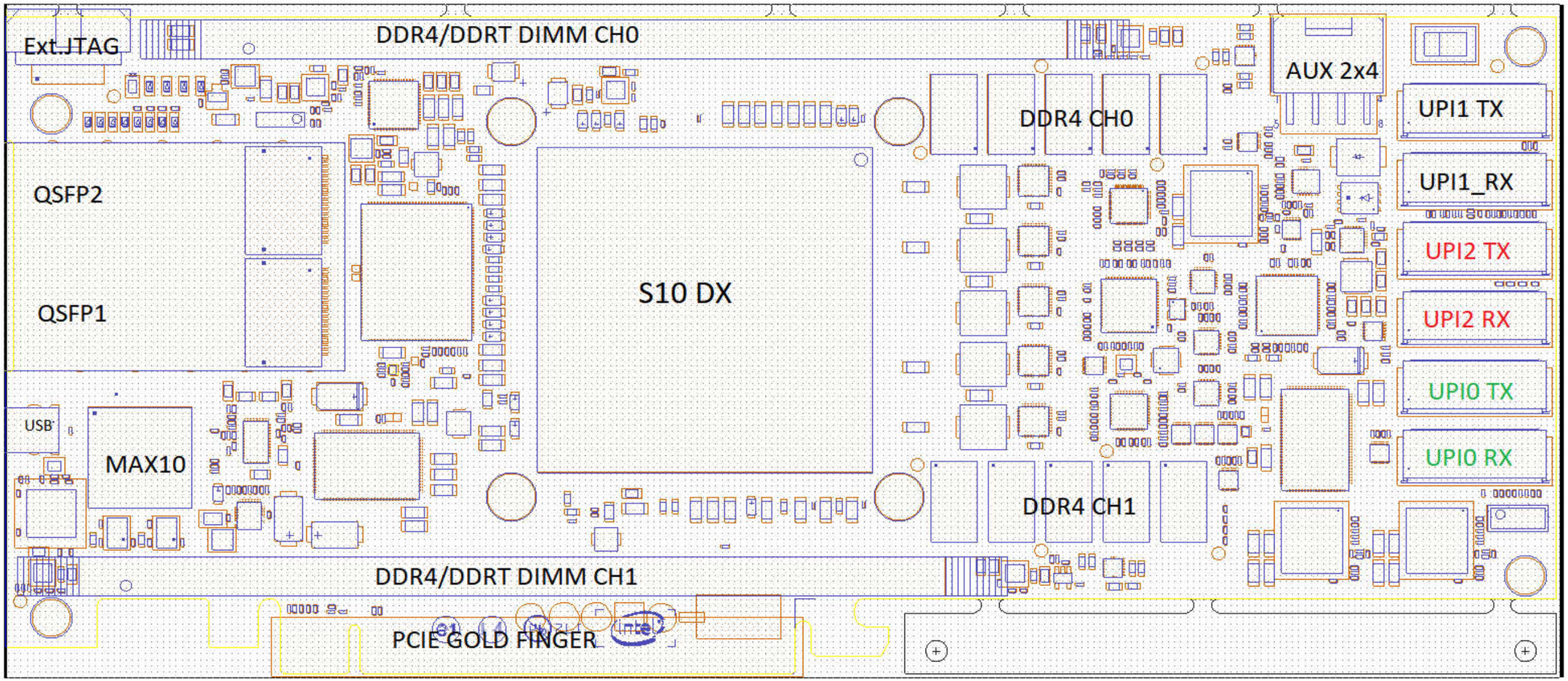

Intel Corporation, 101 Innovation Dr., San Jose CA 95134
Copyright (c) 2016, Intel Corporation. All Rights Reserved.

Title	Stratix 10 DX FPGA DEVKIT Board	
Size: B	Document Number: 150-0330653-A (K49172-001)	Rev: A
Date: Friday, May 24, 2019	Sheet 24 of 69	

UPI0 LINKS

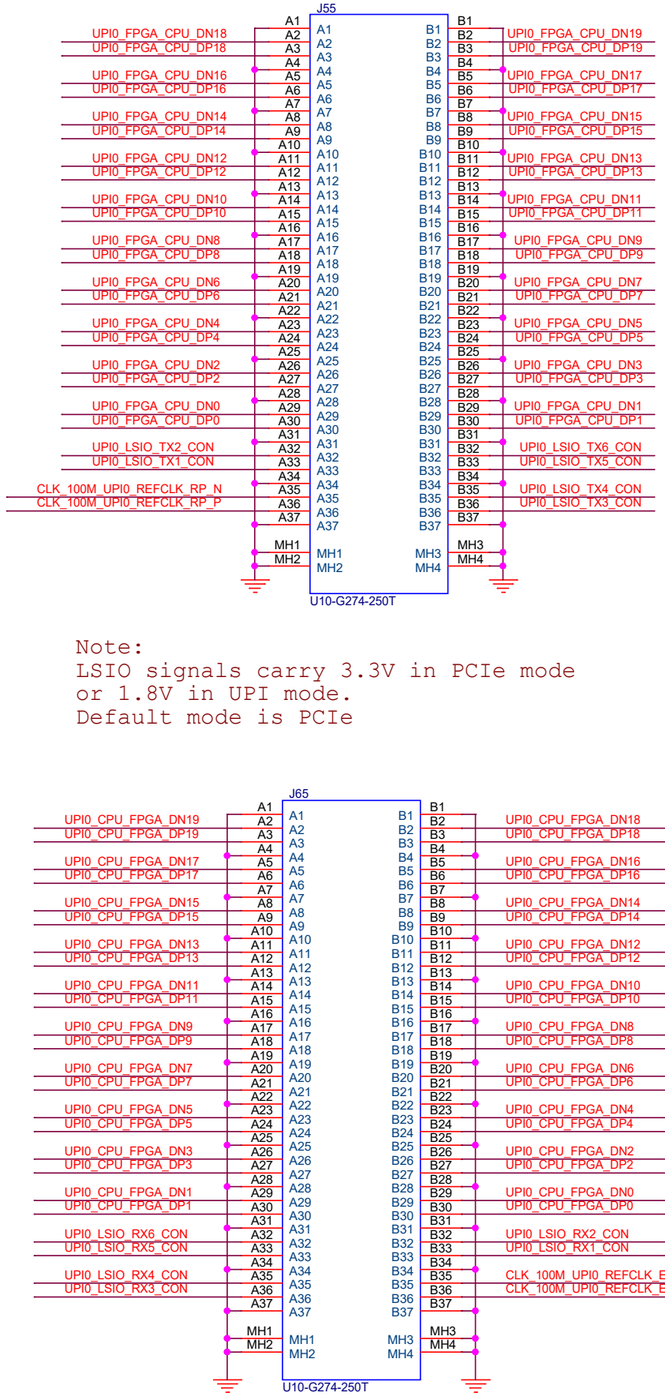

Note:
LSIO signals carry 3.3V in PCIe mode
or 1.8V in UPI mode.
Default mode is PCIe

TDV UPI0

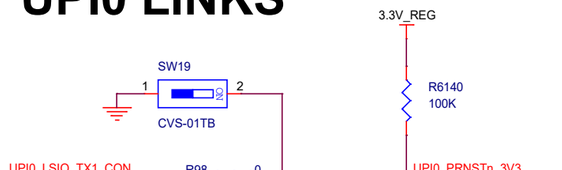

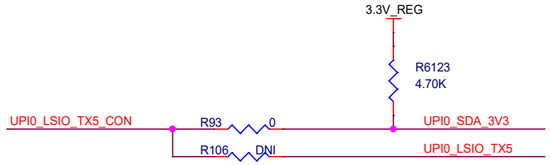

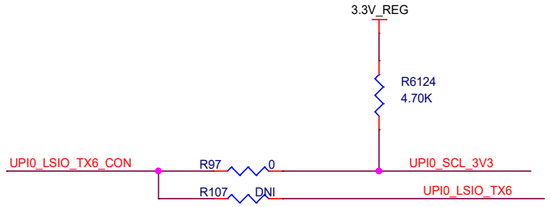

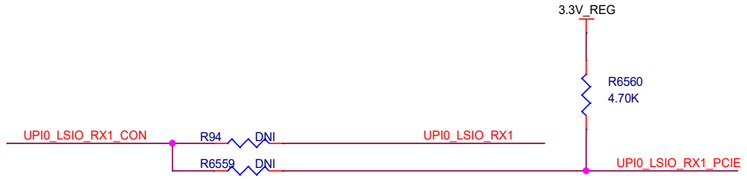

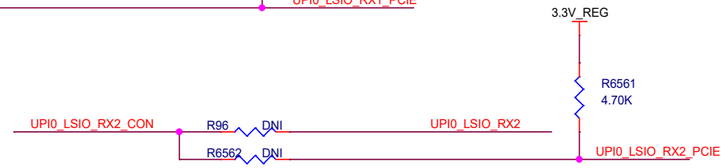

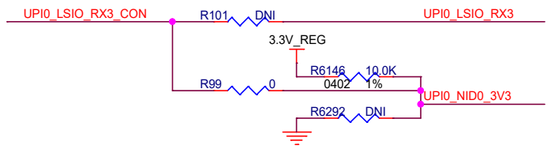

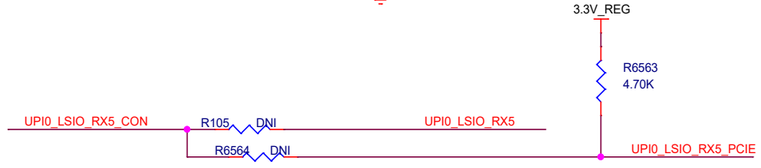

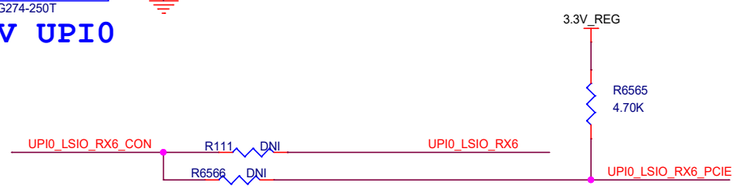

UPI0_CPU_FPGA_DN[19:0] 15
UPI0_CPU_FPGA_DP[19:0] 15
UPI0_FPGA_CPU_DN[19:0] 15
UPI0_FPGA_CPU_DP[19:0] 15
CLK_100M_UPI0_REFCLK_RP_P 22
CLK_100M_UPI0_REFCLK_RP_N 22
CLK_100M_UPI0_REFCLK_EP_P 22
CLK_100M_UPI0_REFCLK_EP_N 22
UPI0_LSIO_TX[6:1] 12
UPI0_LSIO_RX[6:1] 12
UPI0_PRNSTn_3V3 68
UPI0_PERSTn 68
UPI0_SDA_3V3 68
UPI0_SCL_3V3 68
UPI0_NID0_3V3 68
UPI0_NID1_3V3 68

UPI0_LSIO_RX1_PCIE 69
UPI0_LSIO_RX2_PCIE 69
UPI0_LSIO_RX5_PCIE 69
UPI0_LSIO_RX6_PCIE 69

Intel Corporation, 101 Innovation Dr., San Jose CA 95134
Copyright (c) 2016, Intel Corporation. All Rights Reserved.

Title: Stratix 10 DX FPGA DEVKIT Board

Size	Document Number	Rev
Custom	150-0330653-A (K49172-001)	A

Date: Friday, May 24, 2019 Sheet 25 of 69

UPI1 LINK

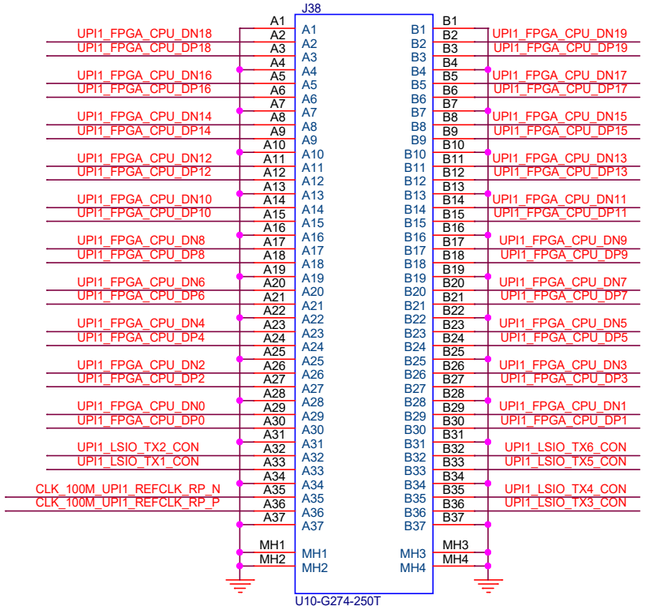

Note:
LSIO signals carry 3.3V in PCIe mode
or 1.8V in UPI mode.
Default mode is PCIe

UPI1 ONLY SUPPOR SLAVE EP PCIE OR UPI SLAVE MODE ON FPGA INTERFACE

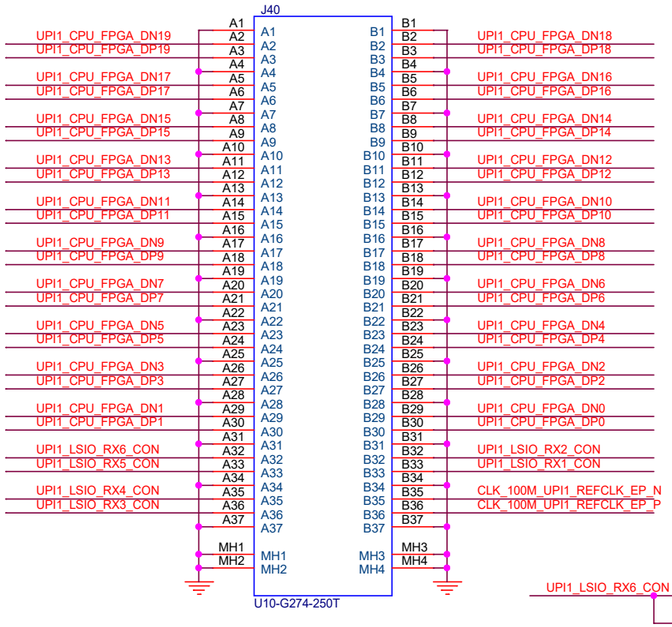

TDV UPI1

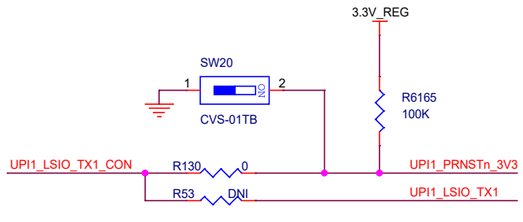

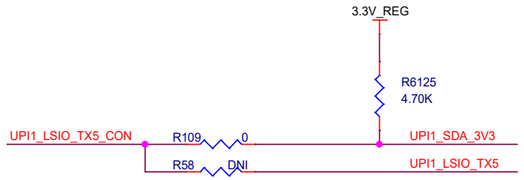

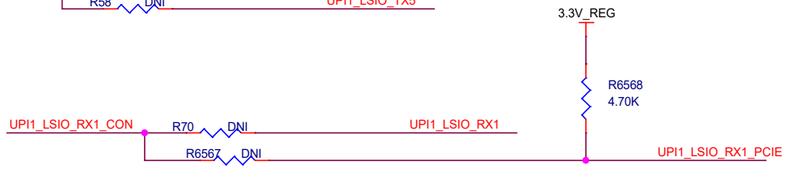

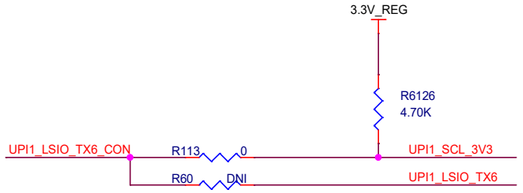

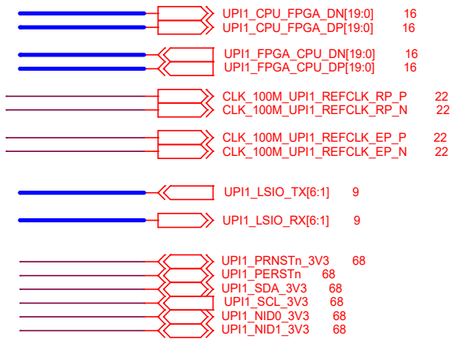

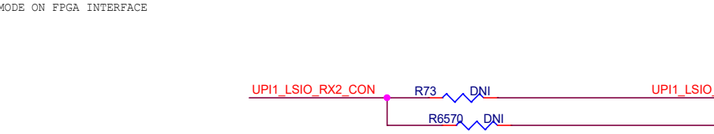

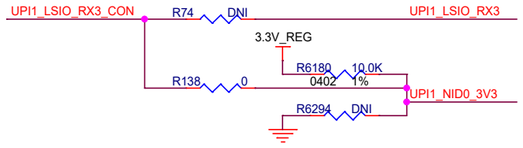

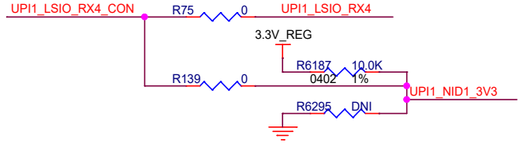

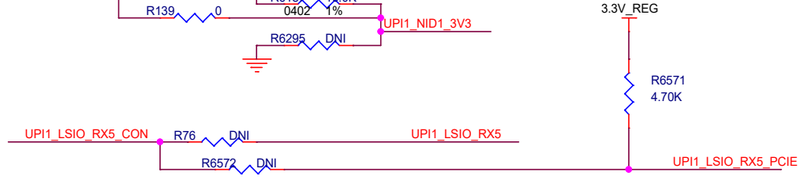

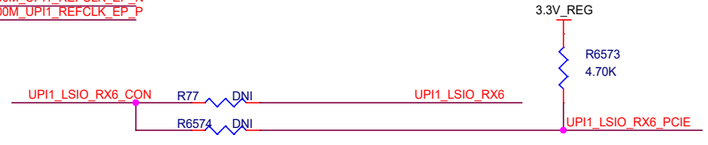

Intel Corporation, 101 Innovation Dr., San Jose CA 95134
Copyright (c) 2016, Intel Corporation. All Rights Reserved.

Title	Stratix 10 DX FPGA DEVKIT Board	
Size: Custom	Document Number: 150-0330653-A (K49172-001)	Rev: A
Date: Friday, May 24, 2019	Sheet 26 of 69	

UPI2 LINK

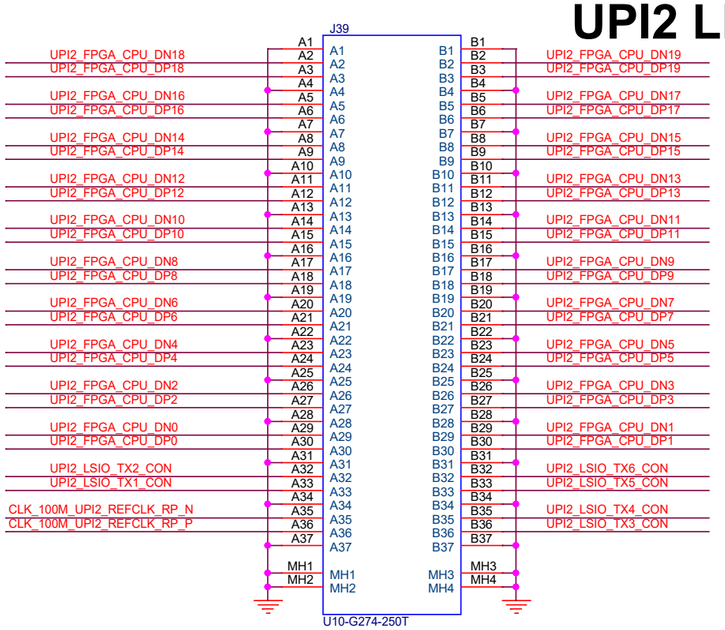

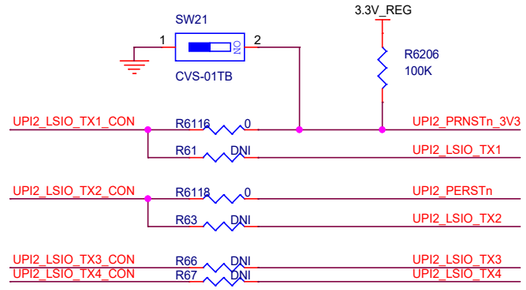

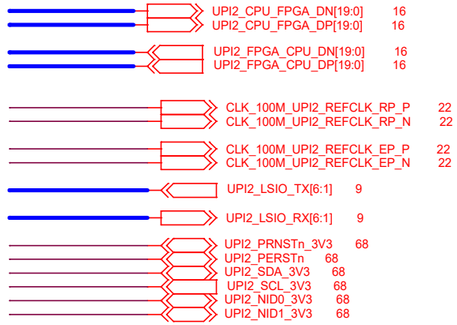

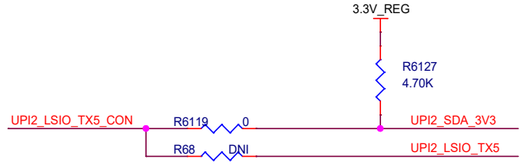

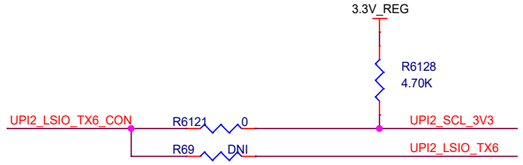

UPI1 ONLY SUPPOR SLAVE EP PCIE OR UPI SLAVE MODE ON FPGA INTERFACE

Note:
LSIO signals carry 3.3V in PCIe mode
or 1.8V in UPI mode.
Default mode is PCIe

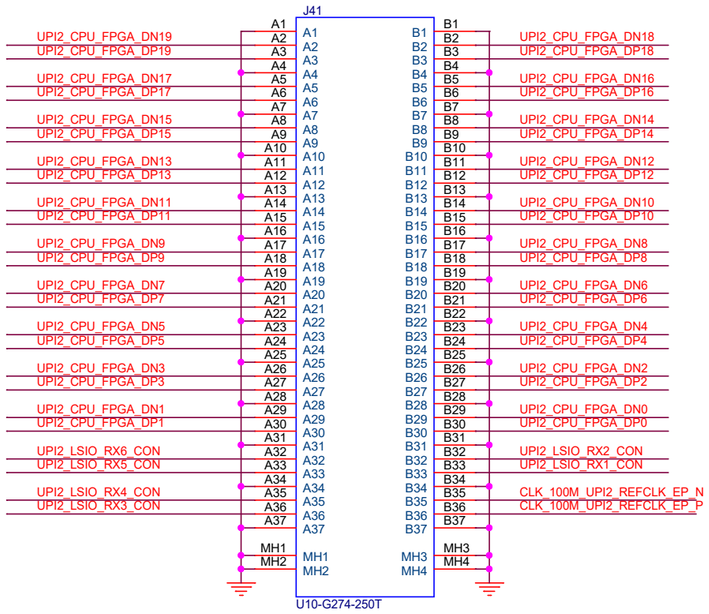

TDV UPI2

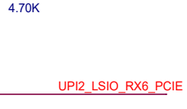

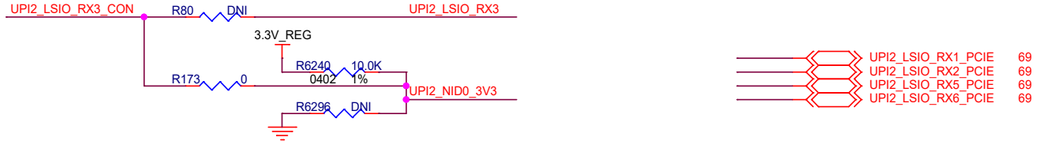

Intel Corporation, 101 Innovation Dr., San Jose CA 95134
Copyright (C) 2016, Intel Corporation. All Rights Reserved.

Title	Stratix 10 DX FPGA DEVKIT Board	
Size: Custom	Document Number: 150-0330653-A (K49172-001)	Rev: A
Date: Friday, May 24, 2019	Sheet 27 of 69	

zQSFP Controller

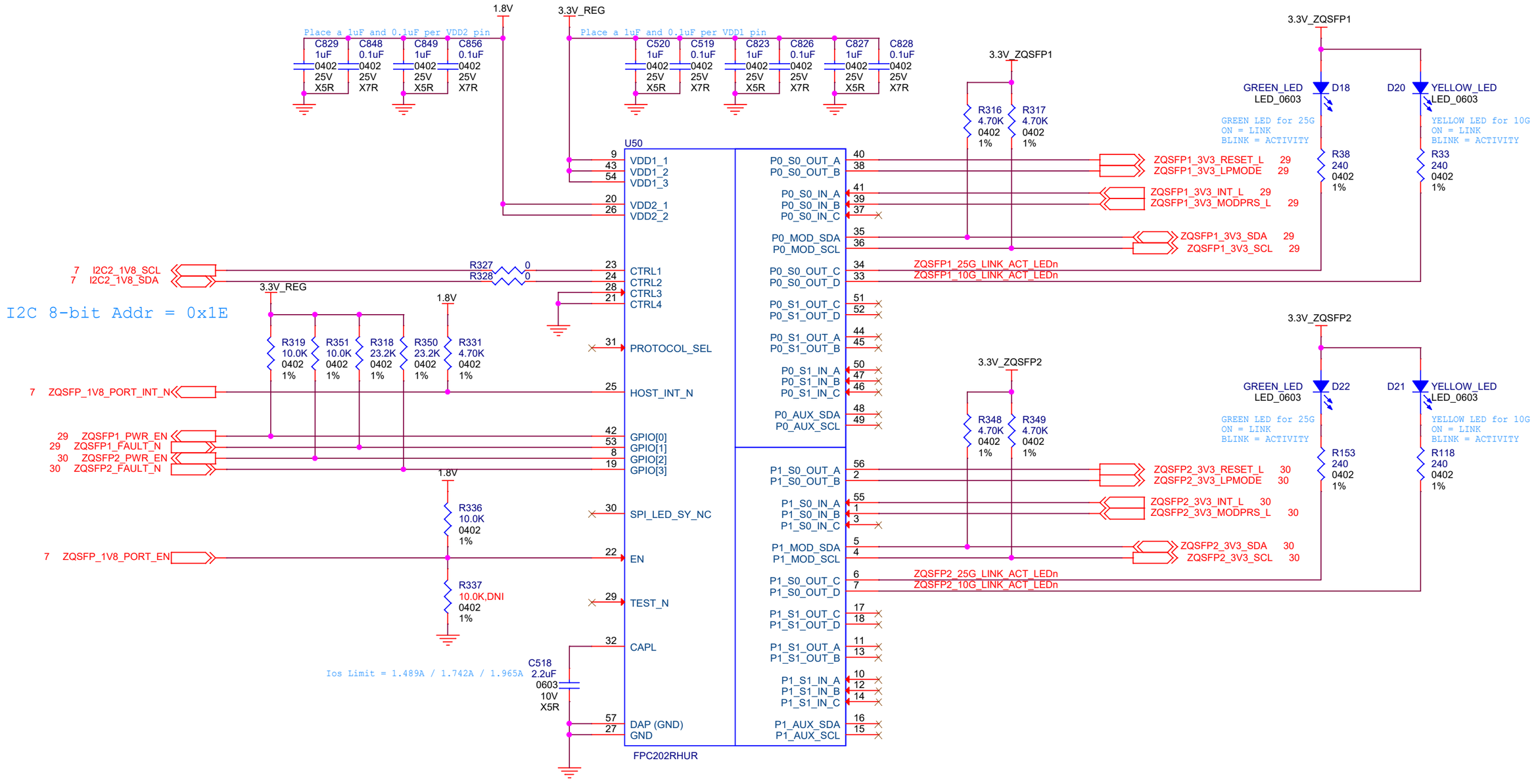

Addr = 0x02,0x1E

Intel Corporation, 101 Innovation Dr., San Jose CA 95134
Copyright (c) 2016, Intel Corporation. All Rights Reserved.

Title	Stratix 10 DX FPGA DEVKIT Board	
Size: B	Document Number: 150-0330653-A (K49172-001)	Rev: A
Date: Friday, May 24, 2019	Sheet 28 of 69	

QSFP1

Quad Small Form-factor Pluggable (QSFP) Interface

NOTE 1: Bypass Capacitors should be placed as close to the associated 20-pin connector as possible.

NOTE 2: Assuming that the SFP RD 100-ohm termination on the Host Board FPGA device will be implemented via the on-chip termination circuit.

NOTE 3: DC blocking capacitors are in the module for RX and TX.

NOTE 4: 1uH inductors should have a DC Resistance of less than 0.1-ohm.

Support both CAUI2 and 4x25G ethernet

QSFP1 INTERFACE

14 QSFP1_RX_P[3:0]
14 QSFP1_RX_N[3:0]
14 QSFP1_TX_P[3:0]
14 QSFP1_TX_N[3:0]

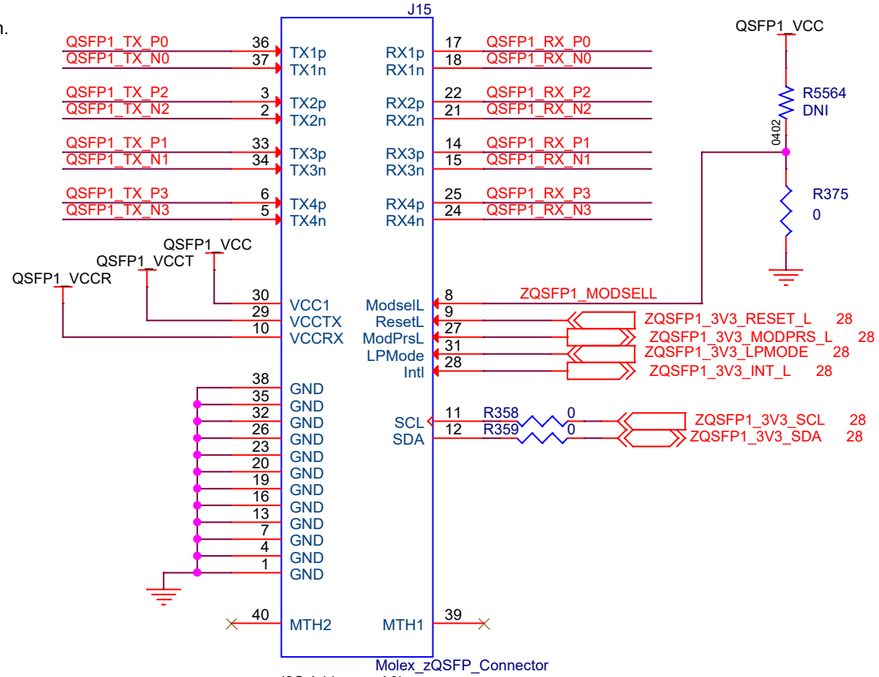

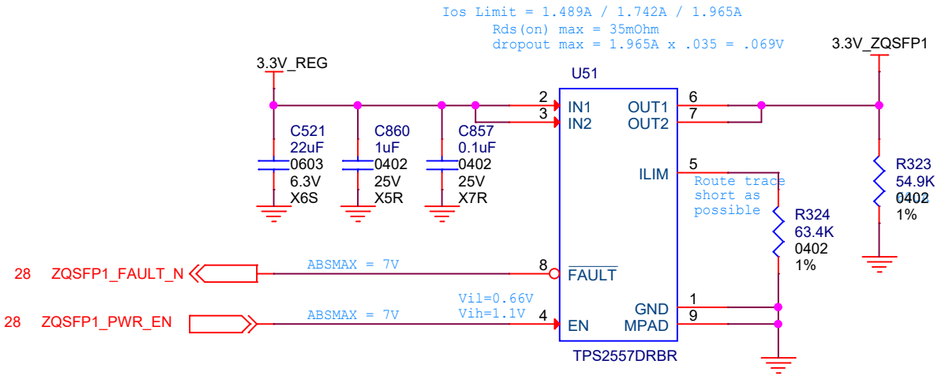

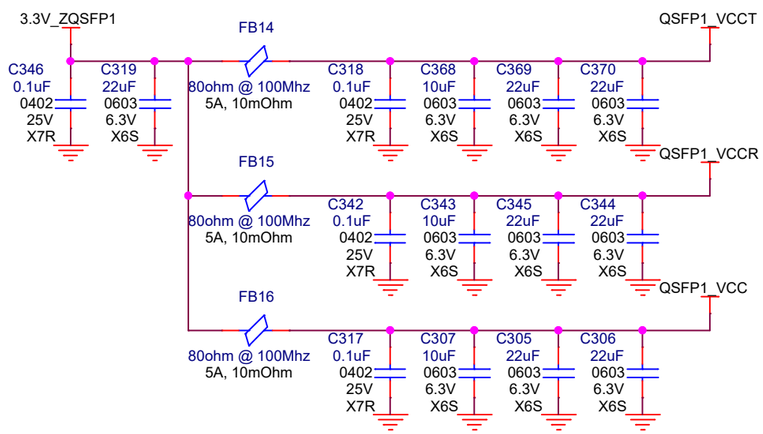

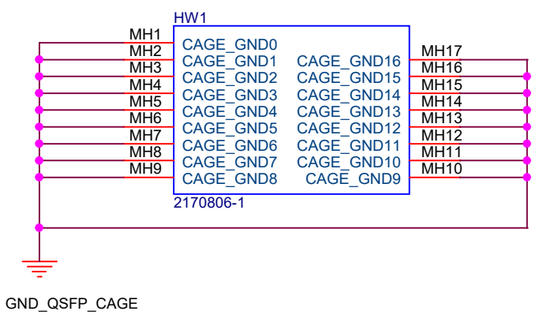

Intel Corporation, 101 Innovation Dr., San Jose CA 95134
Copyright (c) 2016, Intel Corporation. All Rights Reserved.

Title	Stratix 10 DX FPGA DEVKIT Board	
Size: B	Document Number: 150-0330653-A (K49172-001)	Rev: A
Date: Thursday, May 30, 2019	Sheet 29 of 69	

QSFP2

Support both CAUI2 and 4x25G ethernet

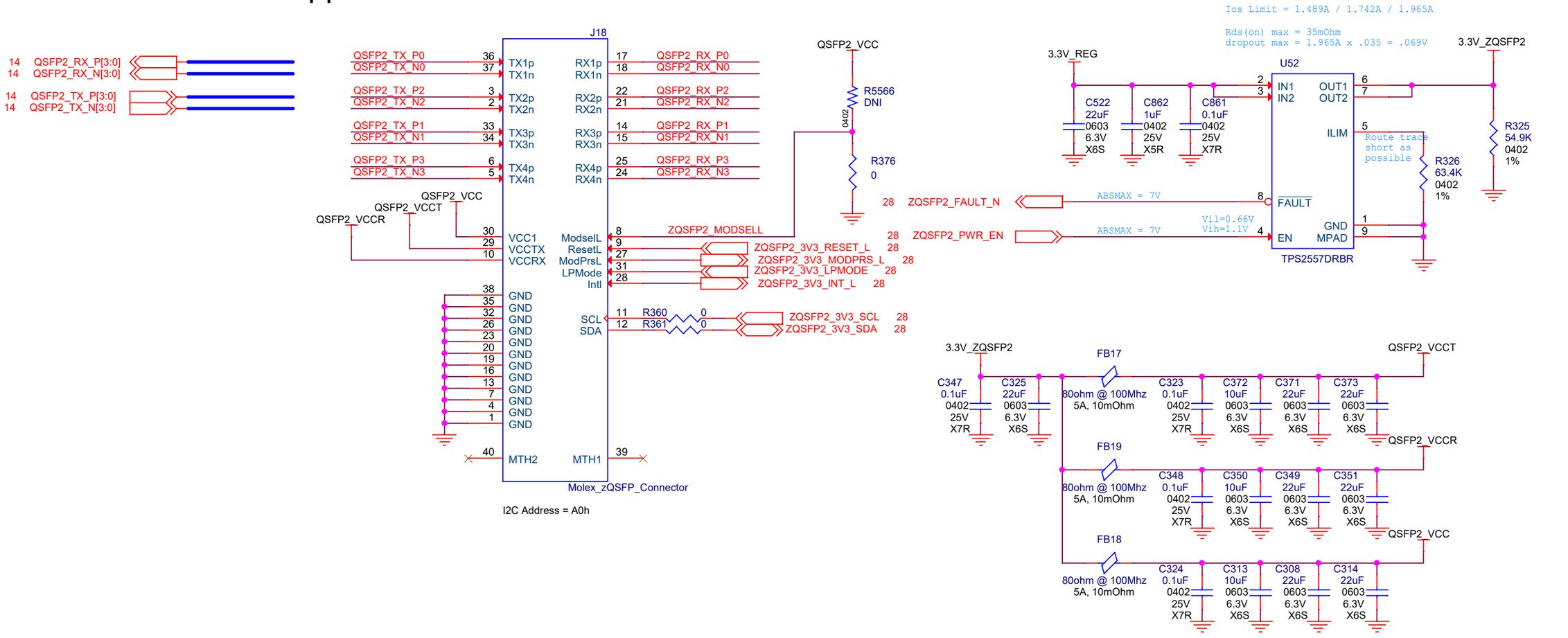

Intel Corporation, 101 Innovation Dr., San Jose CA 95134
Copyright (c) 2016, Intel Corporation. All Rights Reserved.

Title	Stratix 10 DX FPGA DEVKIT Board	
Size: B	Document Number: 150-0330653-A (K49172-001)	Rev: A
Date: Friday, May 24, 2019	Sheet 30 of 69	

User PB, SW, I/Os

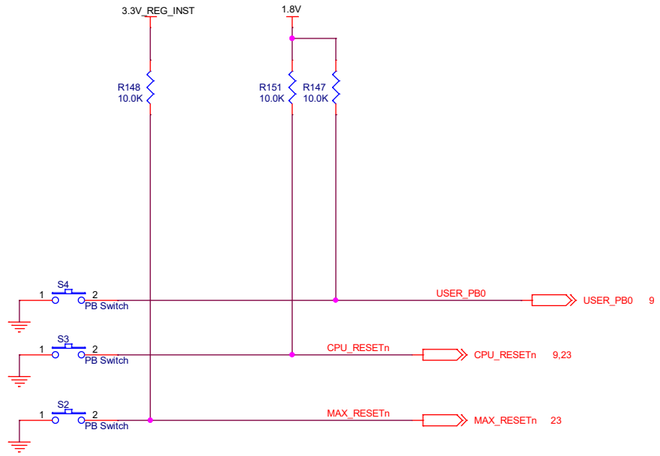

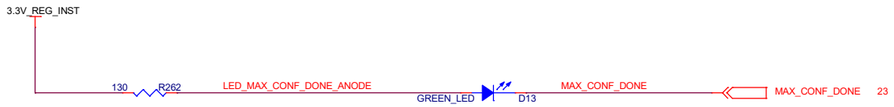

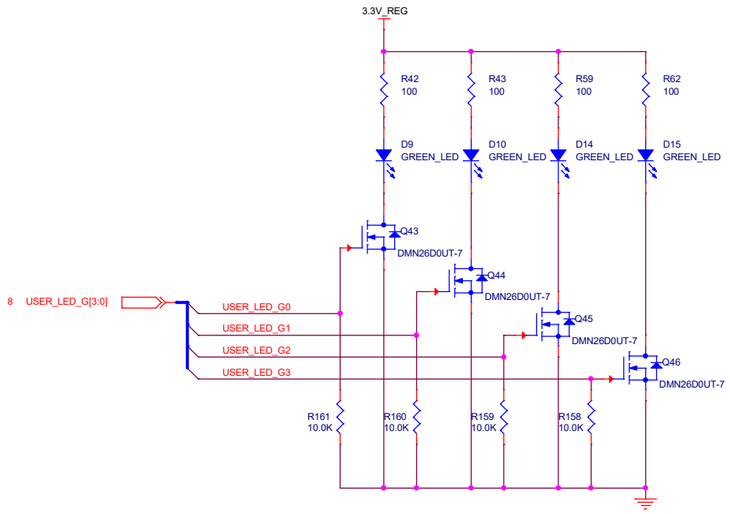

Status LEDs

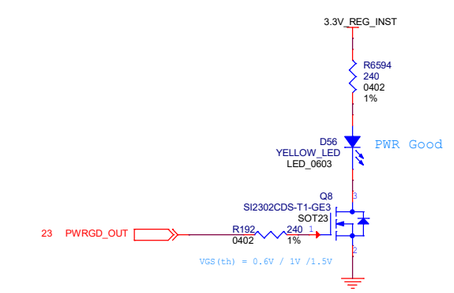

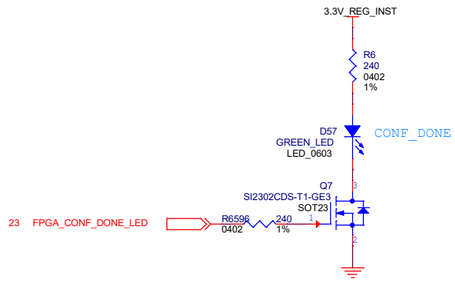

Intel Corporation, 101 Innovation Dr., San Jose CA 95134
Copyright (c) 2016, Intel Corporation. All Rights Reserved.

Title	Stratix 10 DX FPGA DEVKIT Board	
Size: C	Document Number: 150-0330653-A (K49172-001)	Rev: A
Date: Friday, May 24, 2019	Sheet 31 of 69	

USB Blaster II

R219 10.0K
VBUS_5V
FX2_WAKEUP
R221 20.0K
C229 0.1uF 0402

3.3V_REG_INST
C228 0402 0.1uF
U24 MAX811 GND VCC RESET MR
100K R220 FX2_RESETn
R6657 4.70K

When EXT UBII is plugged into J8, USB PHY is held in RESET to avoid contention on PD[3:0] signal with Header JTAG signals.

Q28 SI2302CDS-T1-GE3 SOT23
VGS(th) = 0.6V / 1V /1.5V
100 1% R485 0402
R484 0402 0 5%
USB_PHY_RESETn 23
R483 1K 0402 1%

CN1 MICRO_USB_CONN
VBUS FX2_D_N FX2_D_P ID
VBUS_5V
R597 0, DNI
R222 0
C230 4.7nF 0402

Route as matched pair on Top layer

U25 TPD2EUSB30 GND D+ D-

3.3V_REG_INST
U26 CY7C68013A_QFN
AVCC AVCC VCC VCC VCC VCC VCC VCC
DMINUS DPLUS
IFCLK CLKOUT
XTALIN XTALOUT
RESERVED
AGND AGND
GND GND GND GND GND GND EXPOSED_PAD
RESET SCL SDA
WAKEUP
CTL0 CTL1 CTL2
RDY0 RDY1
PA0 PA1 PA2 PA3 PA4 PA5 PA6 PA7
PB0 PB1 PB2 PB3 PB4 PB5 PB6 PB7
PD0 PD1 PD2 PD3 PD4 PD5 PD6 PD7

FX2_RESETn
FX2_SCL FX2_SDA
R223 2.00K
R224 2.00K
FX2_WAKEUP
FX2_FLAGA FX2_FLAGB FX2_FLAGC
FX2_SLRDn FX2_SLWRn
USB_T_CLK 24M_XTALIN 24M_XTALOUT
FX2_PA0 FX2_PA1 FX2_PA2 FX2_PA3 FX2_PA4 FX2_PA5 FX2_PA6 FX2_PA7
FX2_PB0 FX2_PB1 FX2_PB2 FX2_PB3 FX2_PB4 FX2_PB5 FX2_PB6 FX2_PB7
FX2_PD0 FX2_PD1 FX2_PD2 FX2_PD3 FX2_PD4 FX2_PD5 FX2_PD6 FX2_PD7

Y4 24.00MHz
C231 12pF 0402
C232 12pF 0402

3.3V_REG_INST
PLACE CLOSE CY7C68013
C234 C235 C236 C237 C238 C239 C240 C241 0.1uF 0402

3.3V_REG_INST
FX2_PA[7:0] 23
FX2_PB[7:0] 23
FX2_PD[7:0] 23
USB_T_CLK 23
FX2_FLAGA 23
FX2_FLAGB 23
FX2_FLAGC 23
FX2_SLRDn 23
FX2_SLWRn 23
FX2_RESETn 23
FX2_SCL 23
FX2_SDA 23

Intel Corporation, 101 Innovation Dr., San Jose CA 95134
Copyright (c) 2016, Intel Corporation. All Rights Reserved.

Title: **Stratix 10 DX FPGA DEVKIT Board**

Size	Document Number	Rev
B	150-0330653-A (K49172-001)	A

Date: Friday, May 24, 2019 Sheet 32 of 69

Temp Sense, fan connector

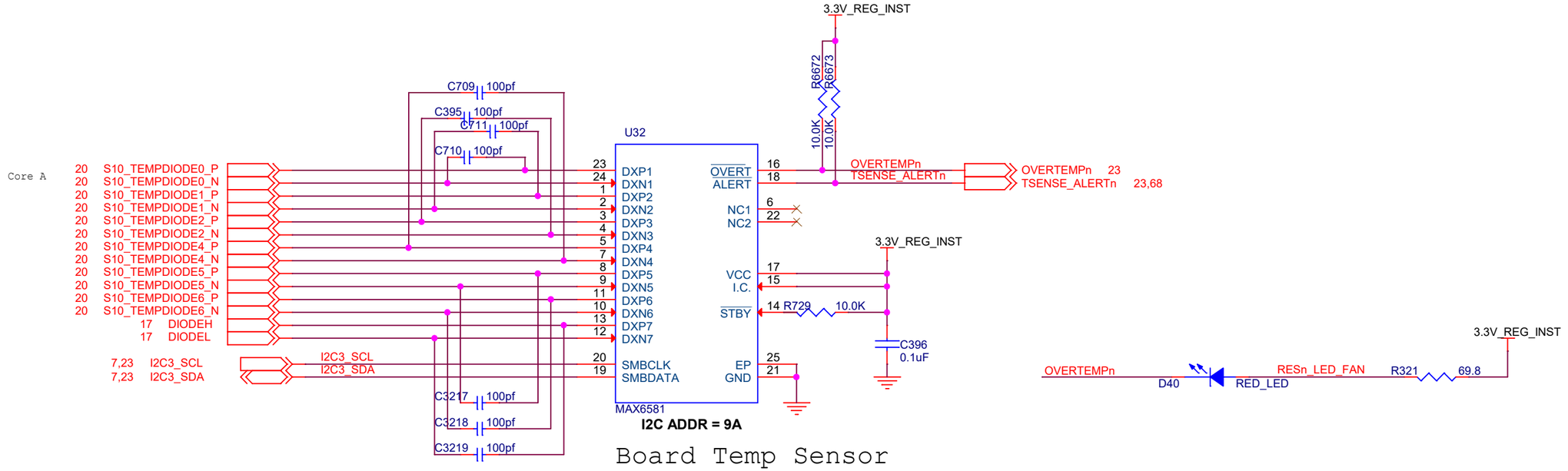

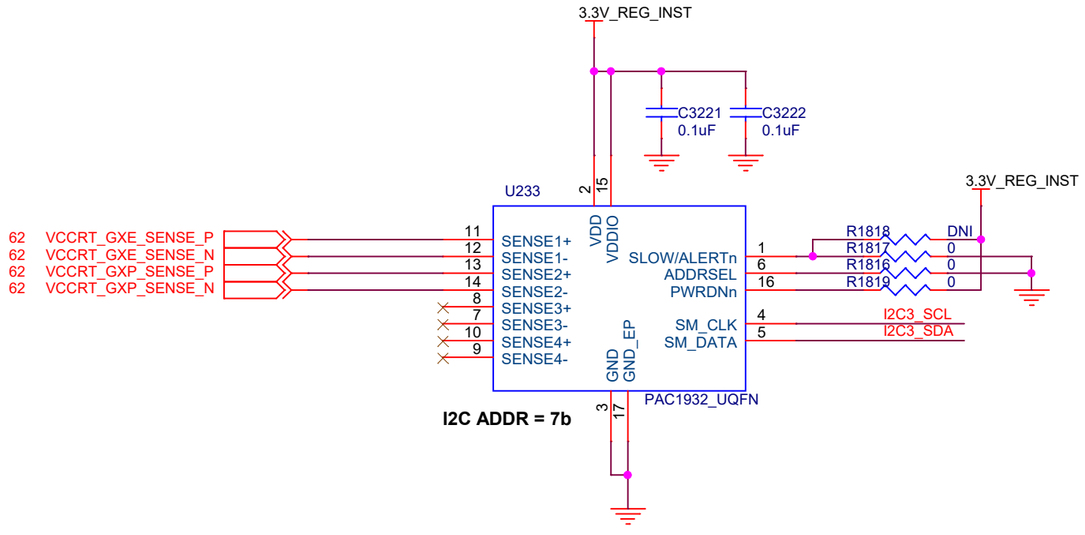

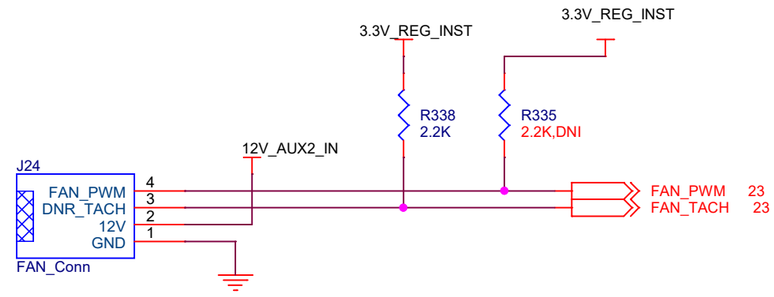

Intel Corporation, 101 Innovation Dr., San Jose CA 95134
Copyright (c) 2016, Intel Corporation. All Rights Reserved.

Title	Stratix 10 DX FPGA DEVKIT Board	
Size B	Document Number 150-0330653-A (K49172-001)	Rev A
Date: Thursday, May 30, 2019	Sheet 33 of 69	

DDR4 CH0 Part1

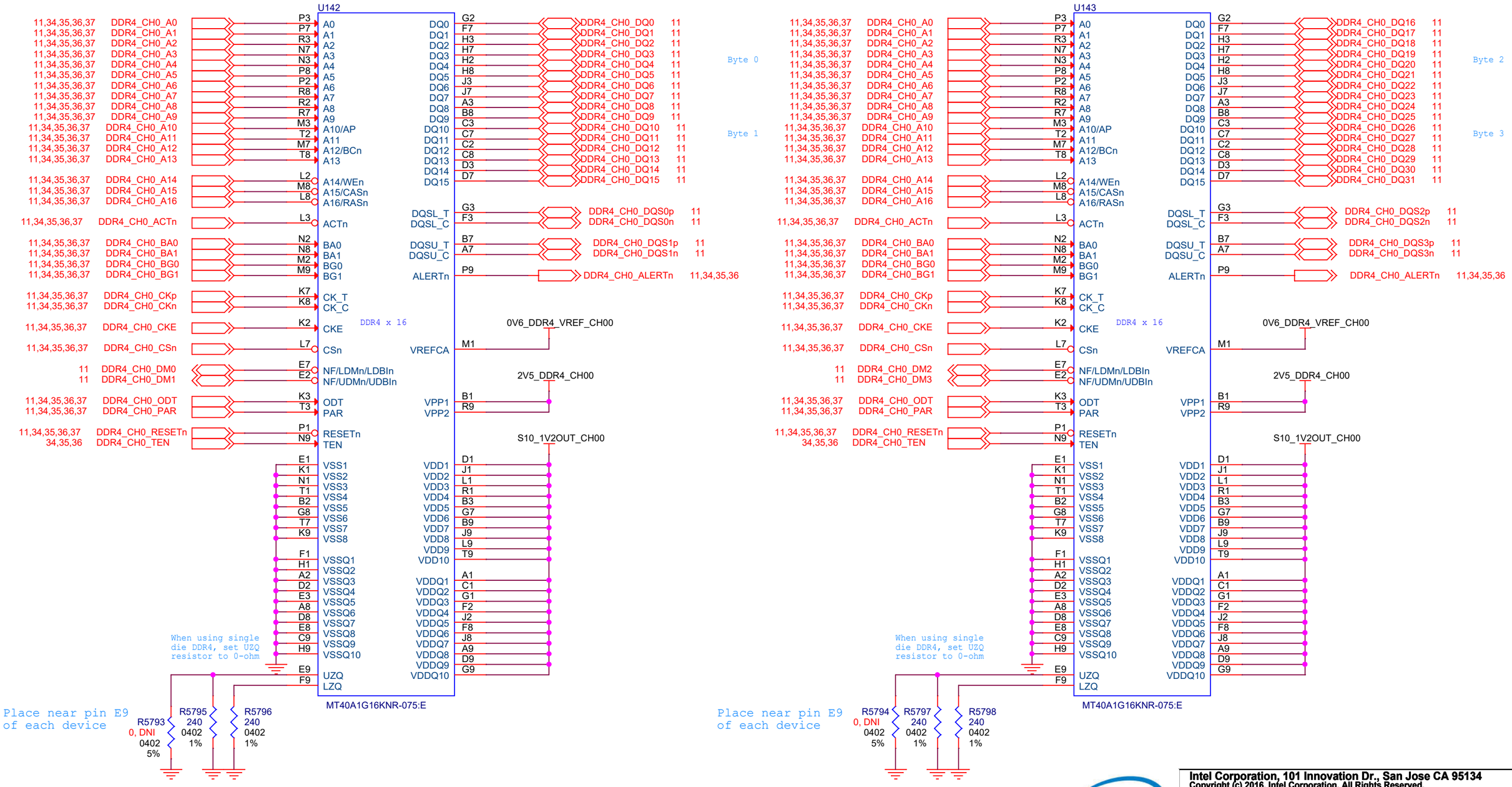

Intel Corporation, 101 Innovation Dr., San Jose CA 95134
Copyright (c) 2016, Intel Corporation. All Rights Reserved.

Title: **Stratix 10 DX FPGA DEVKIT Board**

Size	Document Number	Rev
B	150-0330653-A (K49172-001)	A

Date: Friday, May 24, 2019 Sheet 34 of 69

DDR4 CH0 Part2

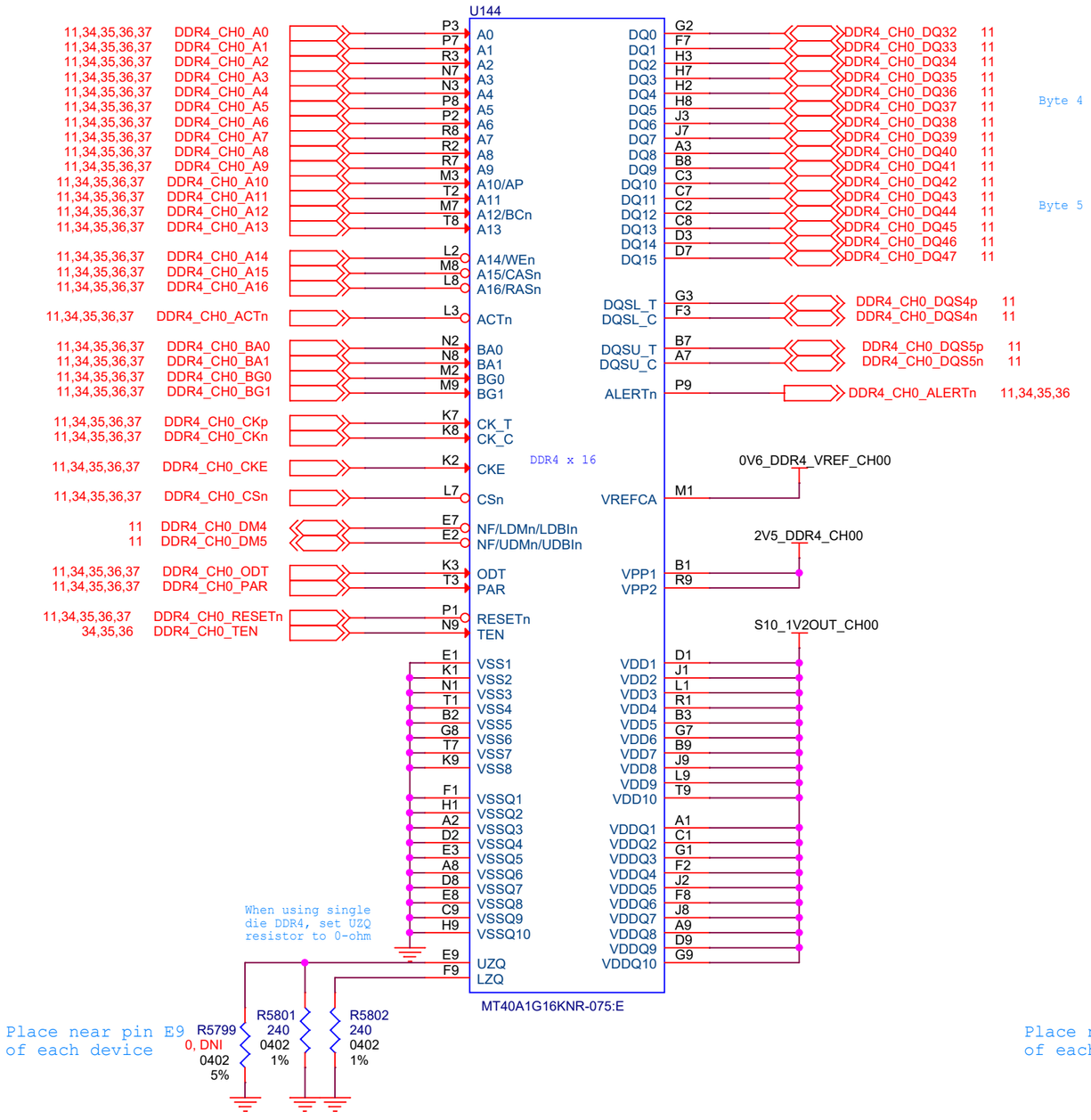

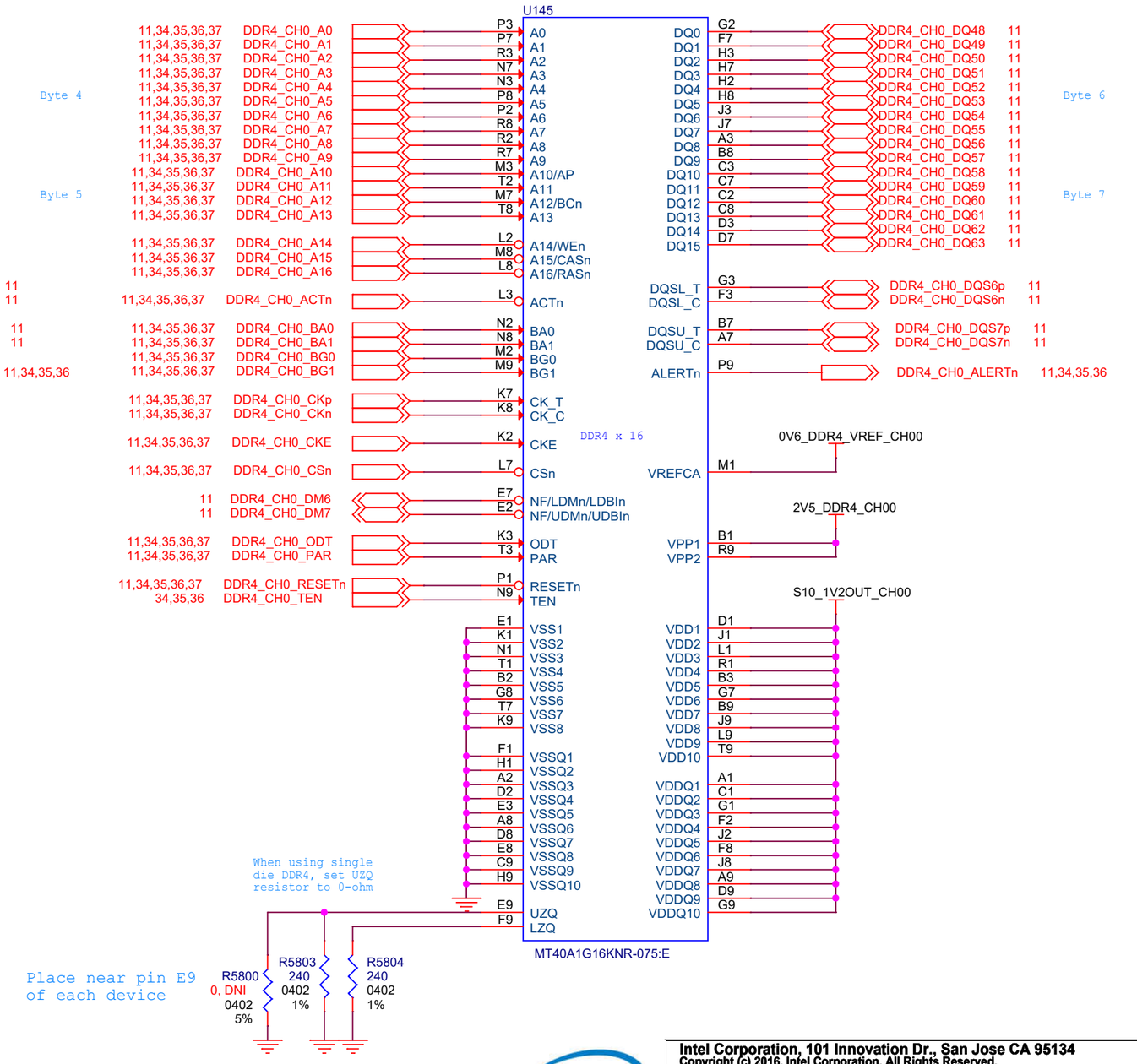

Intel Corporation, 101 Innovation Dr., San Jose CA 95134
Copyright (c) 2016, Intel Corporation. All Rights Reserved.

Title: **Stratix 10 DX FPGA DEVKIT Board**

Size	Document Number	Rev
B	150-0330653-A (K49172-001)	A

Date: Friday, May 24, 2019 Sheet 35 of 69

DDR4 CH0 Part3

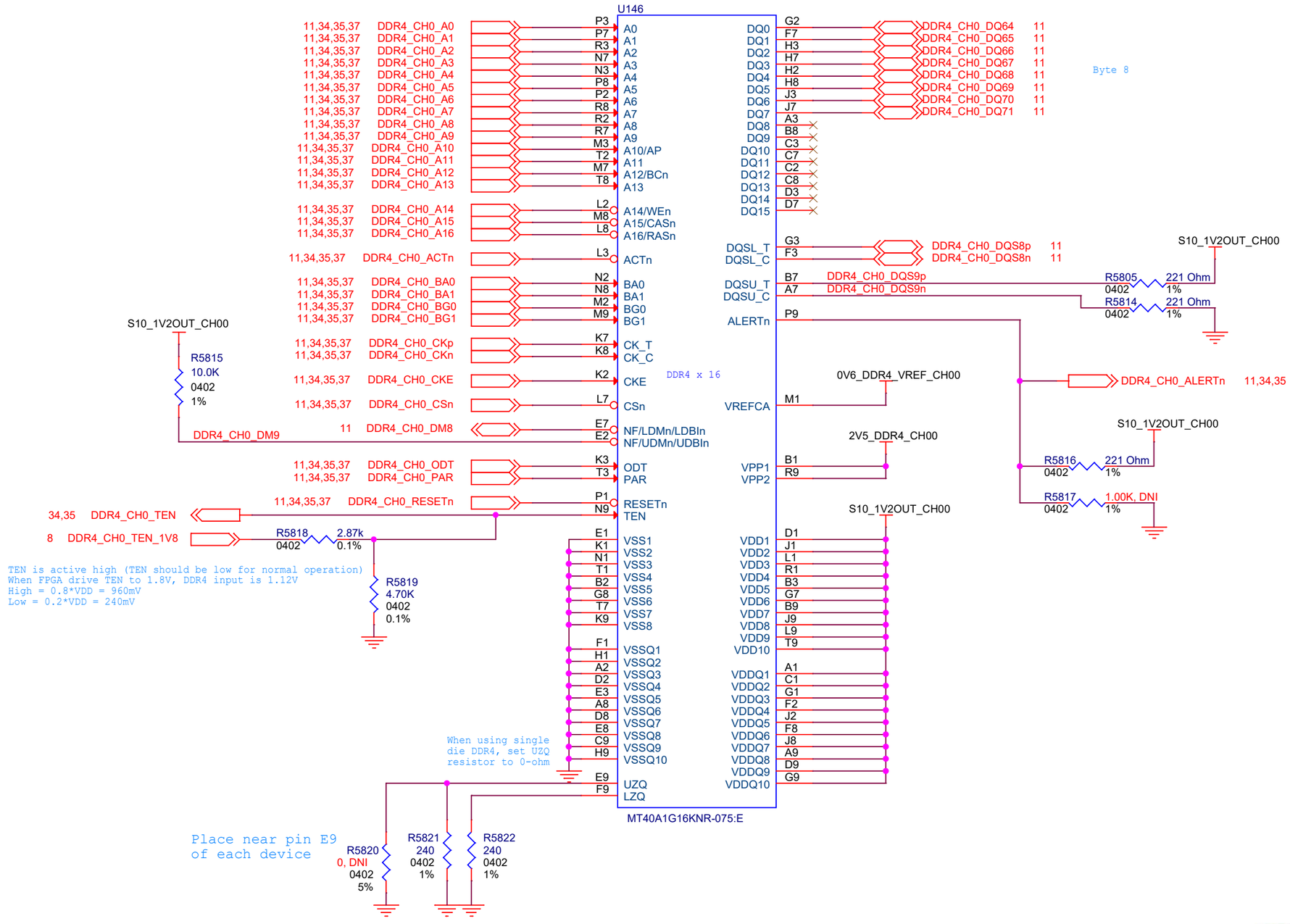

Intel Corporation, 101 Innovation Dr., San Jose CA 95134
Copyright (c) 2016, Intel Corporation. All Rights Reserved.

Title	Stratix 10 DX FPGA DEVKIT Board	
Size: B	Document Number: 150-0330653-A (K49172-001)	Rev: A
Date: Friday, May 24, 2019	Sheet 36 of 69	

DDR4 CH0 Part4

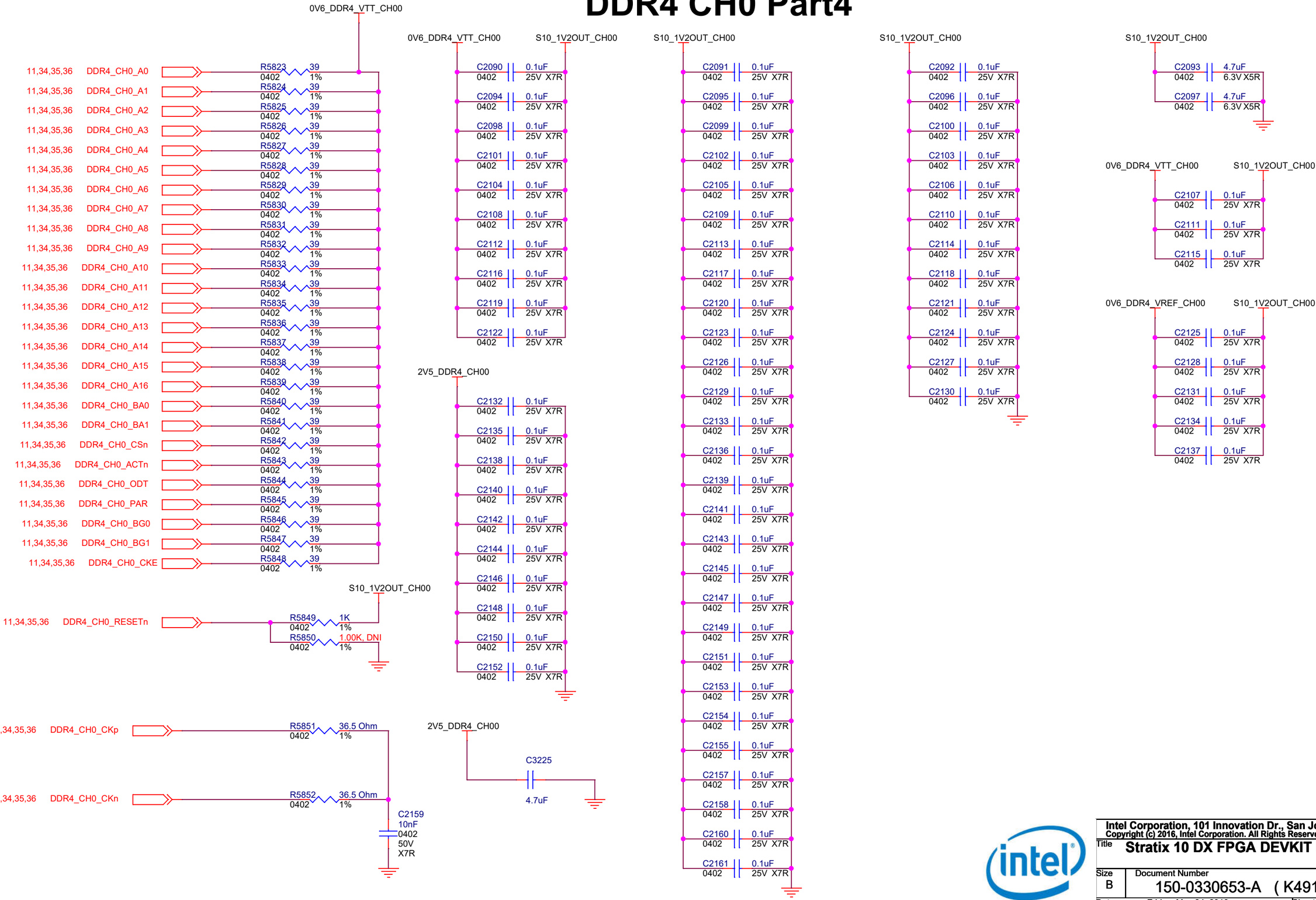

Intel Corporation, 101 Innovation Dr., San Jose CA 95134
Copyright (c) 2016, Intel Corporation. All Rights Reserved.

Title: Stratix 10 DX FPGA DEVKIT Board

Size	Document Number	Rev
B	150-0330653-A (K49172-001)	A

Date: Friday, May 24, 2019 Sheet 37 of 69

DDR4 CH1 Part1

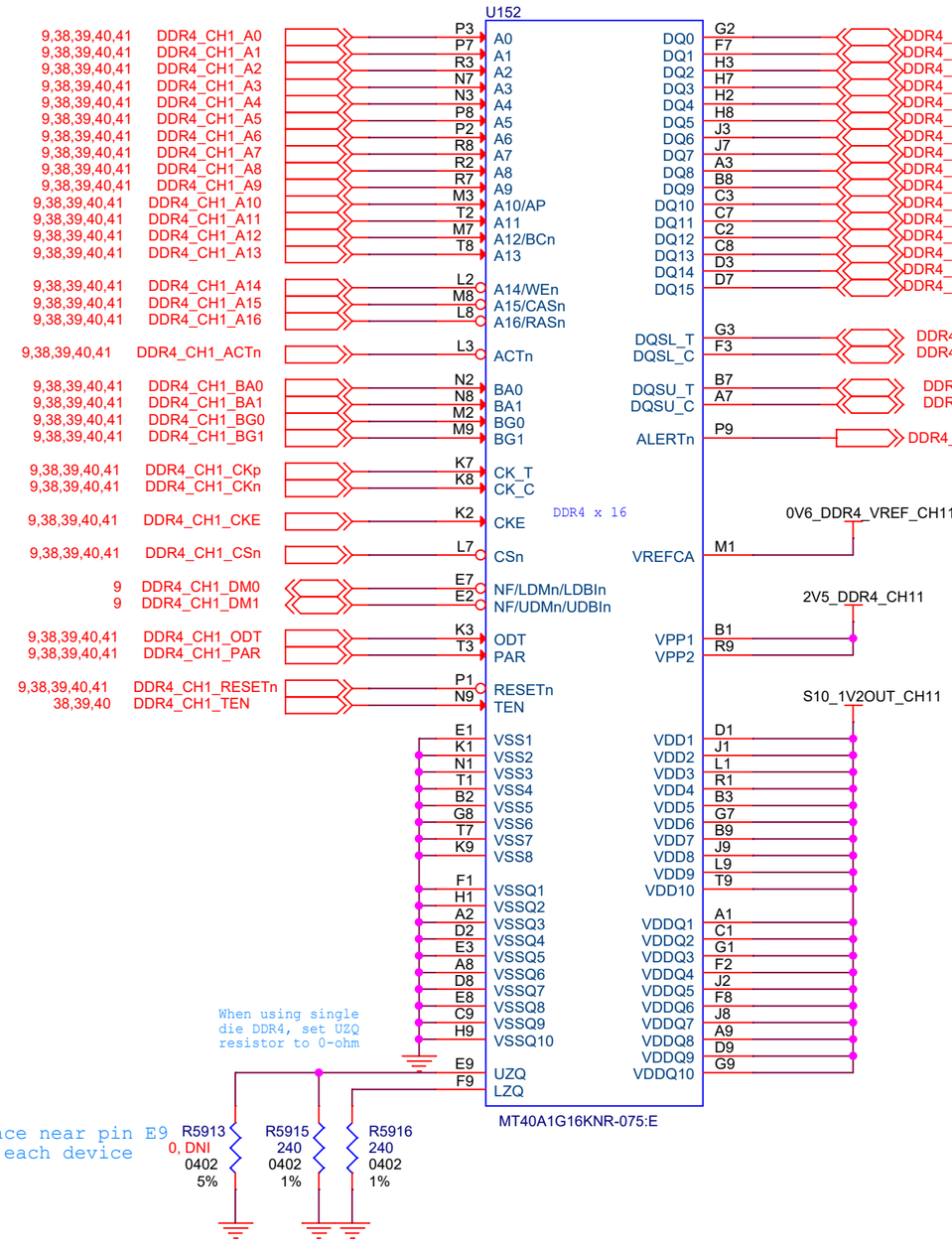

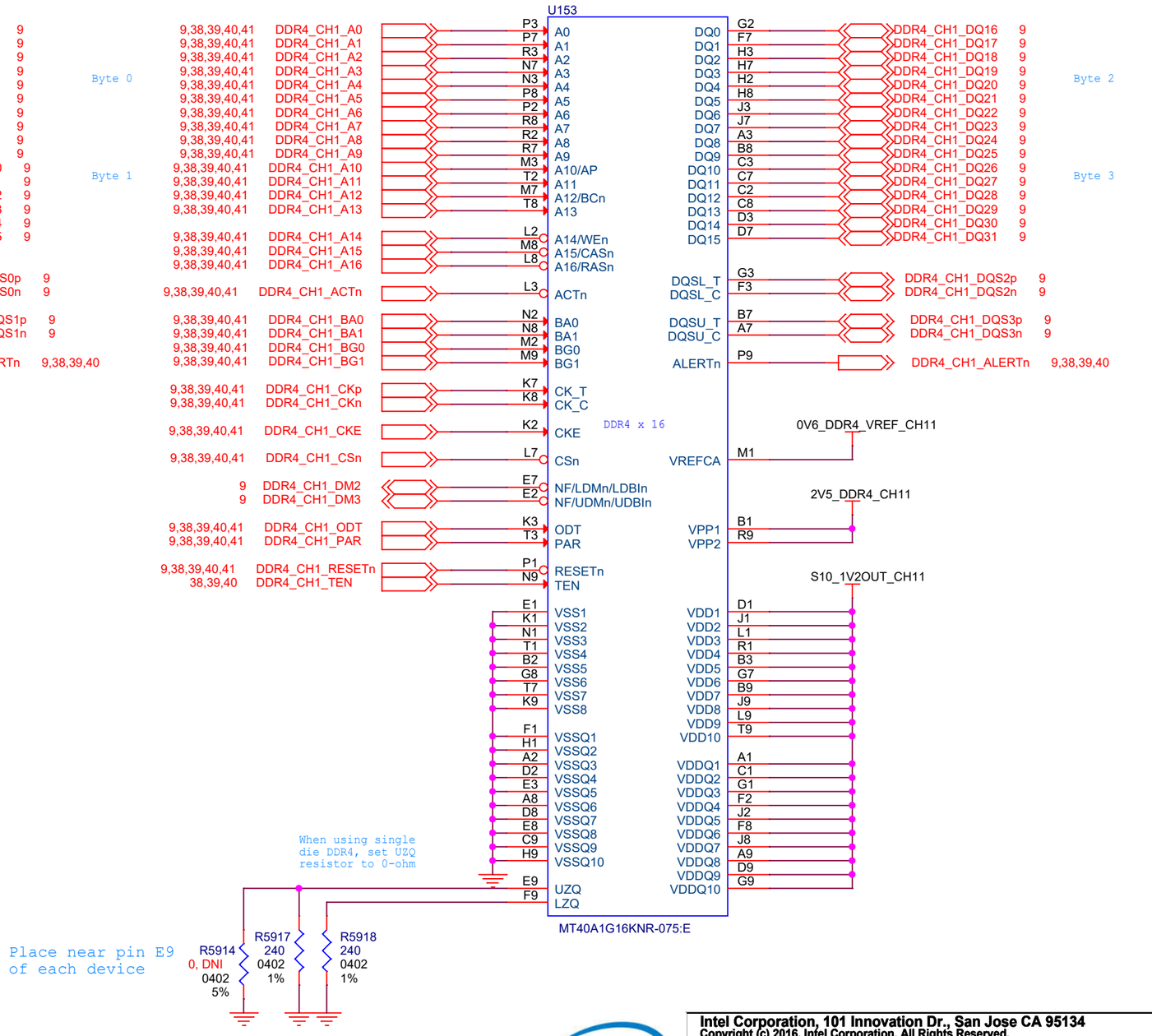

Intel Corporation, 101 Innovation Dr., San Jose CA 95134
Copyright (c) 2016, Intel Corporation. All Rights Reserved.

Title: **Stratix 10 DX FPGA DEVKIT Board**

Size	Document Number	Rev
B	150-0330653-A (K49172-001)	A

Date: Friday, May 24, 2019 Sheet 38 of 69

DDR4 CH1 Part2

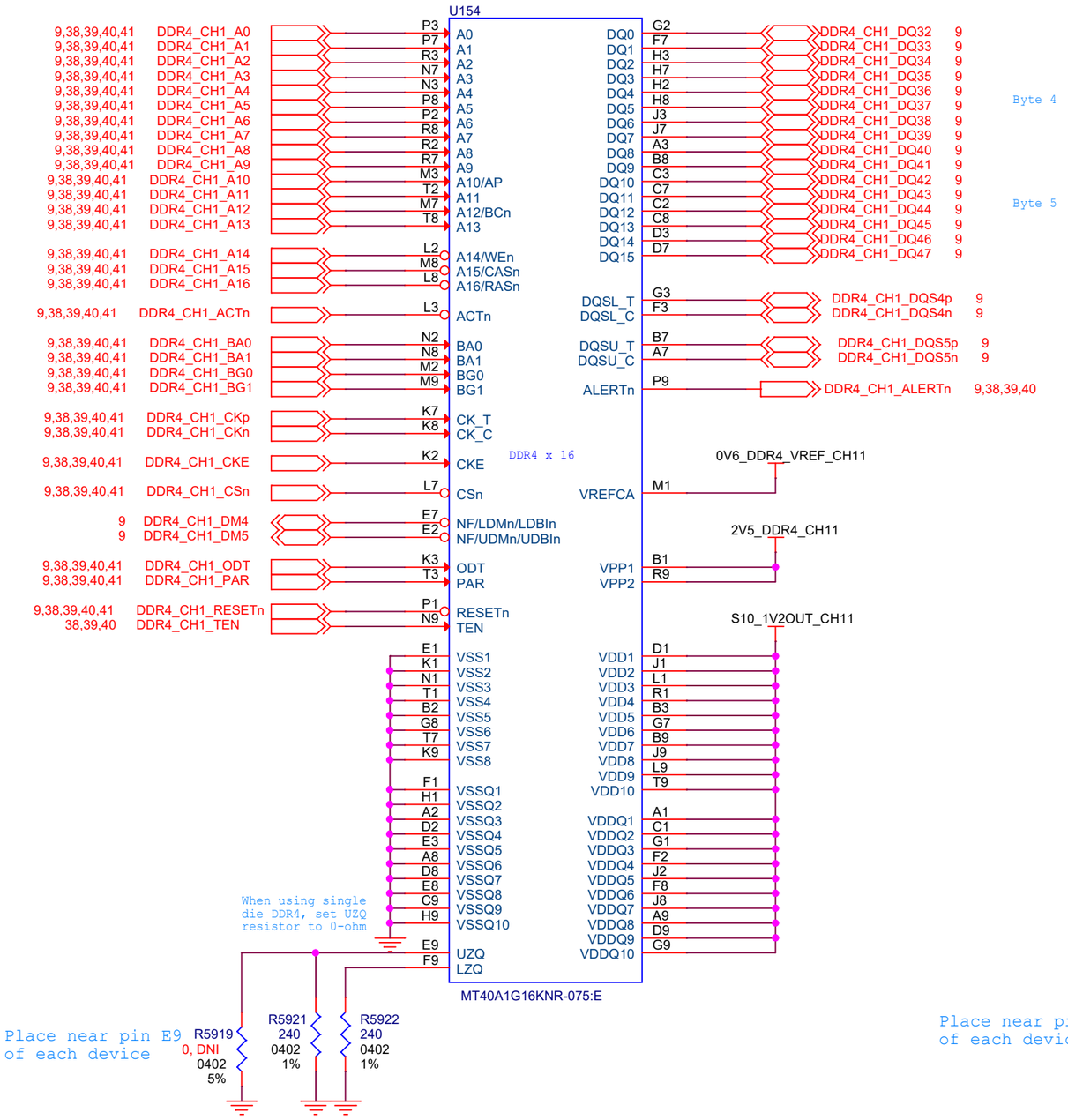

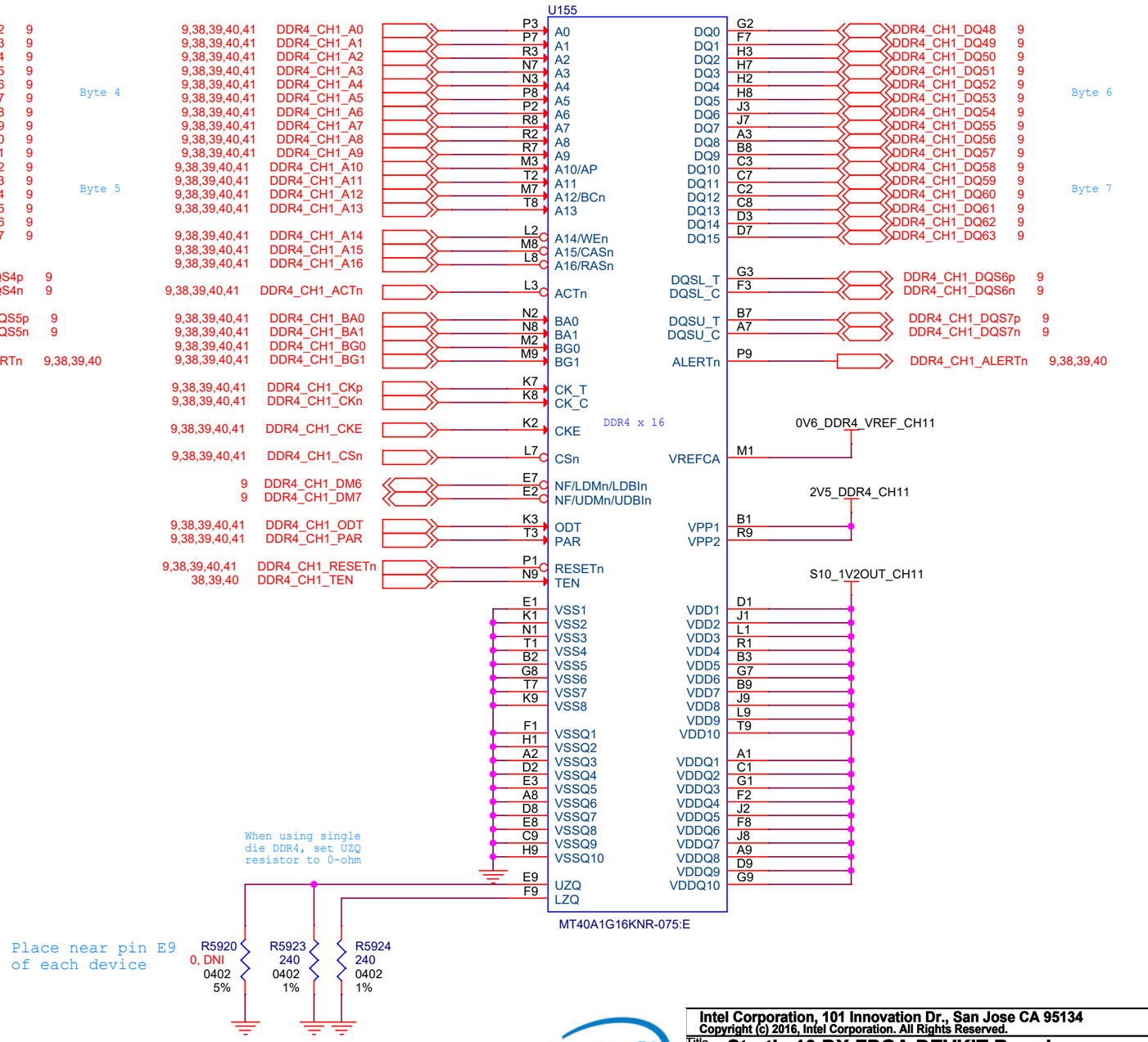

Intel Corporation, 101 Innovation Dr., San Jose CA 95134
Copyright (c) 2016, Intel Corporation. All Rights Reserved.

Title: **Stratix 10 DX FPGA DEVKIT Board**

Size	Document Number	Rev
B	150-0330653-A (K49172-001)	A

Date: Friday, May 24, 2019 Sheet 39 of 69

DDR4 CH1 Part3

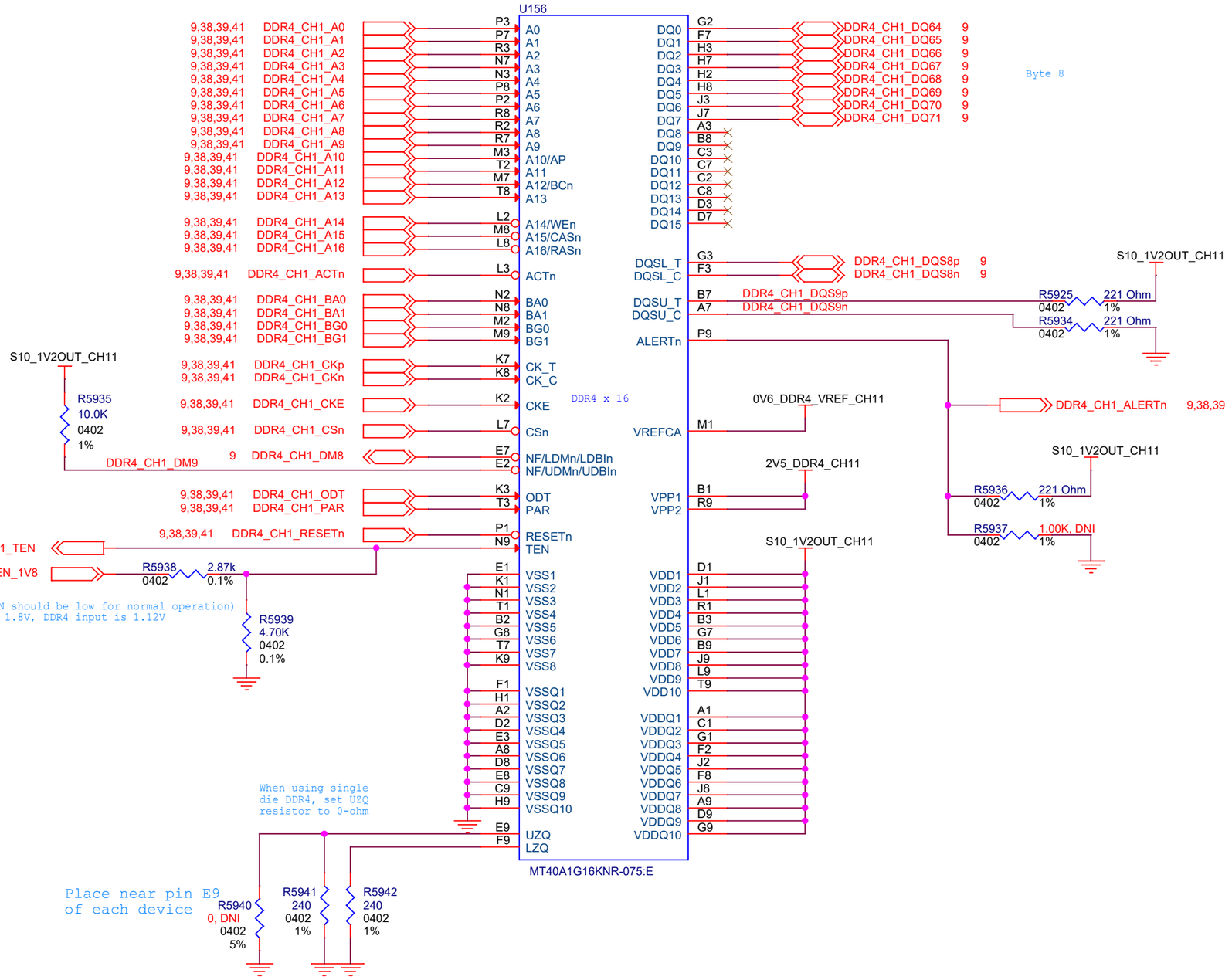

Intel Corporation, 101 Innovation Dr., San Jose CA 95134
Copyright (c) 2016, Intel Corporation. All Rights Reserved.

Title	Stratix 10 DX FPGA DEVKIT Board	
Size: B	Document Number: 150-0330653-A (K49172-001)	Rev: A
Date: Friday, May 24, 2019	Sheet 40 of 69	

DDR4 CH1 Part4

0V6_DDR4_VTT_CH11

9,38,39,40	DDR4_CH1_A0	R5943	39	0402	1%
9,38,39,40	DDR4_CH1_A1	R5944	39	0402	1%
9,38,39,40	DDR4_CH1_A2	R5945	39	0402	1%
9,38,39,40	DDR4_CH1_A3	R5946	39	0402	1%
9,38,39,40	DDR4_CH1_A4	R5947	39	0402	1%
9,38,39,40	DDR4_CH1_A5	R5948	39	0402	1%
9,38,39,40	DDR4_CH1_A6	R5949	39	0402	1%
9,38,39,40	DDR4_CH1_A7	R5950	39	0402	1%
9,38,39,40	DDR4_CH1_A8	R5951	39	0402	1%
9,38,39,40	DDR4_CH1_A9	R5952	39	0402	1%
9,38,39,40	DDR4_CH1_A10	R5953	39	0402	1%
9,38,39,40	DDR4_CH1_A11	R5954	39	0402	1%
9,38,39,40	DDR4_CH1_A12	R5955	39	0402	1%
9,38,39,40	DDR4_CH1_A13	R5956	39	0402	1%
9,38,39,40	DDR4_CH1_A14	R5957	39	0402	1%
9,38,39,40	DDR4_CH1_A15	R5958	39	0402	1%
9,38,39,40	DDR4_CH1_A16	R5959	39	0402	1%
9,38,39,40	DDR4_CH1_BA0	R5960	39	0402	1%
9,38,39,40	DDR4_CH1_BA1	R5961	39	0402	1%
9,38,39,40	DDR4_CH1_CSn	R5962	39	0402	1%
9,38,39,40	DDR4_CH1_ACTn	R5963	39	0402	1%
9,38,39,40	DDR4_CH1_ODT	R5964	39	0402	1%
9,38,39,40	DDR4_CH1_PAR	R5965	39	0402	1%
9,38,39,40	DDR4_CH1_BG0	R5966	39	0402	1%
9,38,39,40	DDR4_CH1_BG1	R5967	39	0402	1%
9,38,39,40	DDR4_CH1_CKE	R5968	39	0402	1%

S10_1V2OUT_CH11

9,38,39,40	DDR4_CH1_RESETn	R5969	1K	0402 1%
		R5970	1.00K, DNI	0402 1%

2V5_DDR4_CH11

9,38,39,40	DDR4_CH1_CKp	R5971	36.5 Ohm	0402 1%
9,38,39,40	DDR4_CH1_CKn	R5972	36.5 Ohm	0402 1%

C2304 10nF 0402 50V X7R

0V6_DDR4_VTT_CH11 / S10_1V2OUT_CH11

C2234	0.1uF	0402 25V X7R
C2238	0.1uF	0402 25V X7R
C2242	0.1uF	0402 25V X7R
C2245	0.1uF	0402 25V X7R
C2248	0.1uF	0402 25V X7R
C2252	0.1uF	0402 25V X7R
C2256	0.1uF	0402 25V X7R
C2260	0.1uF	0402 25V X7R
C2263	0.1uF	0402 25V X7R
C2266	0.1uF	0402 25V X7R

2V5_DDR4_CH11

C2276	0.1uF	0402 25V X7R
C2279	0.1uF	0402 25V X7R
C2282	0.1uF	0402 25V X7R
C2284	0.1uF	0402 25V X7R
C2286	0.1uF	0402 25V X7R
C2288	0.1uF	0402 25V X7R
C2290	0.1uF	0402 25V X7R
C2292	0.1uF	0402 25V X7R
C2294	0.1uF	0402 25V X7R
C2296	0.1uF	0402 25V X7R

2V5_DDR4_CH11

C1647 4.7uF

S10_1V2OUT_CH11

C2235	0.1uF	0402 25V X7R
C2239	0.1uF	0402 25V X7R
C2243	0.1uF	0402 25V X7R
C2246	0.1uF	0402 25V X7R
C2249	0.1uF	0402 25V X7R
C2253	0.1uF	0402 25V X7R
C2257	0.1uF	0402 25V X7R
C2261	0.1uF	0402 25V X7R
C2264	0.1uF	0402 25V X7R
C2267	0.1uF	0402 25V X7R
C2270	0.1uF	0402 25V X7R
C2273	0.1uF	0402 25V X7R
C2277	0.1uF	0402 25V X7R
C2280	0.1uF	0402 25V X7R
C2283	0.1uF	0402 25V X7R
C2285	0.1uF	0402 25V X7R
C2287	0.1uF	0402 25V X7R
C2289	0.1uF	0402 25V X7R
C2291	0.1uF	0402 25V X7R
C2293	0.1uF	0402 25V X7R
C2295	0.1uF	0402 25V X7R
C2297	0.1uF	0402 25V X7R
C2298	0.1uF	0402 25V X7R
C2299	0.1uF	0402 25V X7R
C2301	0.1uF	0402 25V X7R
C2302	0.1uF	0402 25V X7R
C2303	0.1uF	0402 25V X7R
C2305	0.1uF	0402 25V X7R

S10_1V2OUT_CH11

C2236	0.1uF	0402 25V X7R
C2240	0.1uF	0402 25V X7R
C2244	0.1uF	0402 25V X7R
C2247	0.1uF	0402 25V X7R
C2250	0.1uF	0402 25V X7R
C2254	0.1uF	0402 25V X7R
C2258	0.1uF	0402 25V X7R
C2262	0.1uF	0402 25V X7R
C2265	0.1uF	0402 25V X7R
C2268	0.1uF	0402 25V X7R
C2271	0.1uF	0402 25V X7R
C2274	0.1uF	0402 25V X7R

S10_1V2OUT_CH11

C2237	4.7uF	0402 6.3V X5R
C2241	4.7uF	0402 6.3V X5R

0V6_DDR4_VTT_CH11 / S10_1V2OUT_CH11

C2251	0.1uF	0402 25V X7R
C2255	0.1uF	0402 25V X7R
C2259	0.1uF	0402 25V X7R

0V6_DDR4_VREF_CH11 / S10_1V2OUT_CH11

C2269	0.1uF	0402 25V X7R
C2272	0.1uF	0402 25V X7R
C2275	0.1uF	0402 25V X7R
C2278	0.1uF	0402 25V X7R
C2281	0.1uF	0402 25V X7R

Intel Corporation, 101 Innovation Dr., San Jose CA 95134
Copyright (c) 2016, Intel Corporation. All Rights Reserved.

Title: Stratix 10 DX FPGA DEVKIT Board

Size	Document Number	Rev
B	150-0330653-A (K49172-001)	A

Date: Friday, May 24, 2019 Sheet 41 of 69

DDR4/DDRT DIMM CH0

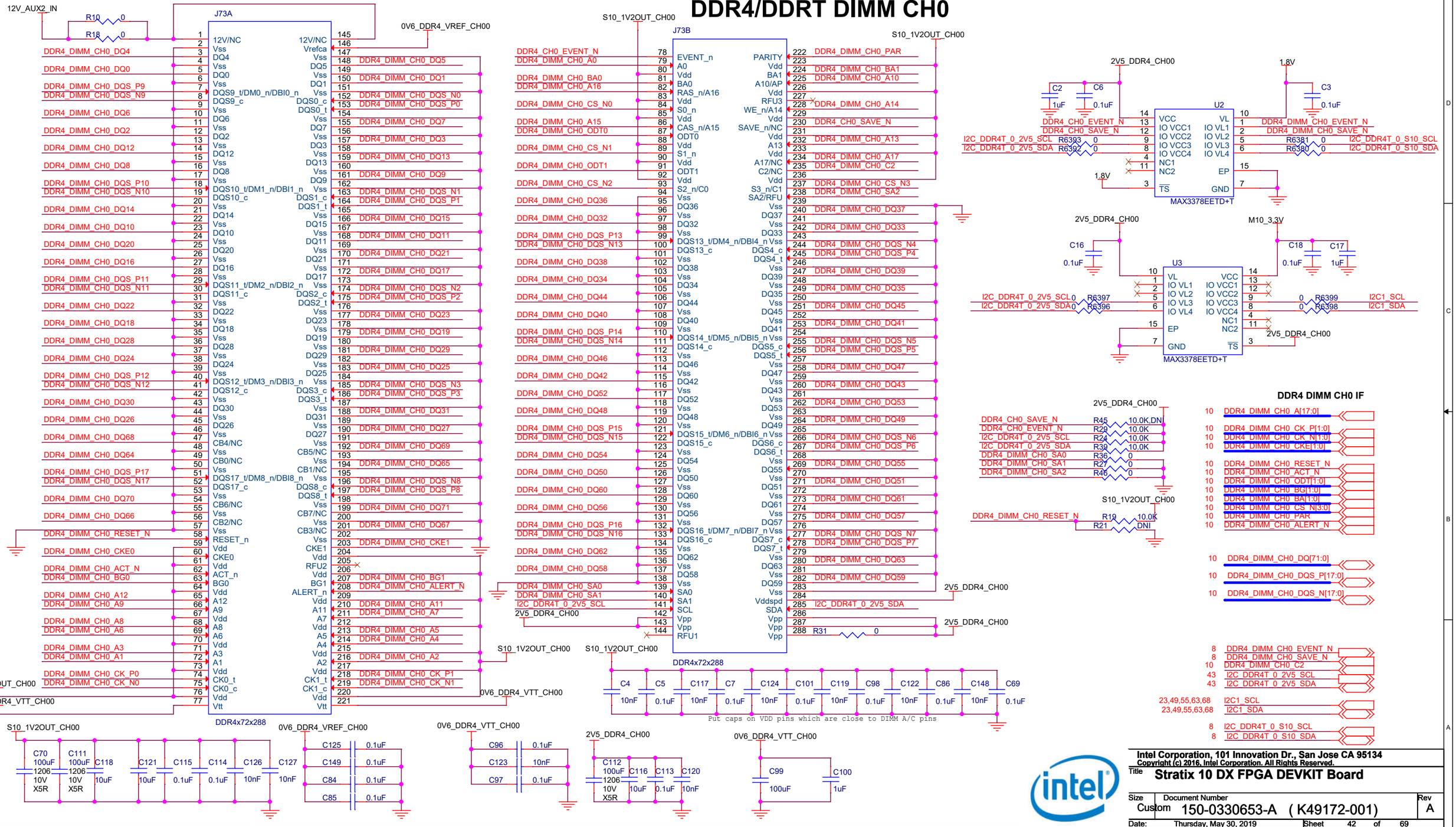

DDR4/DDRT DIMM CH1

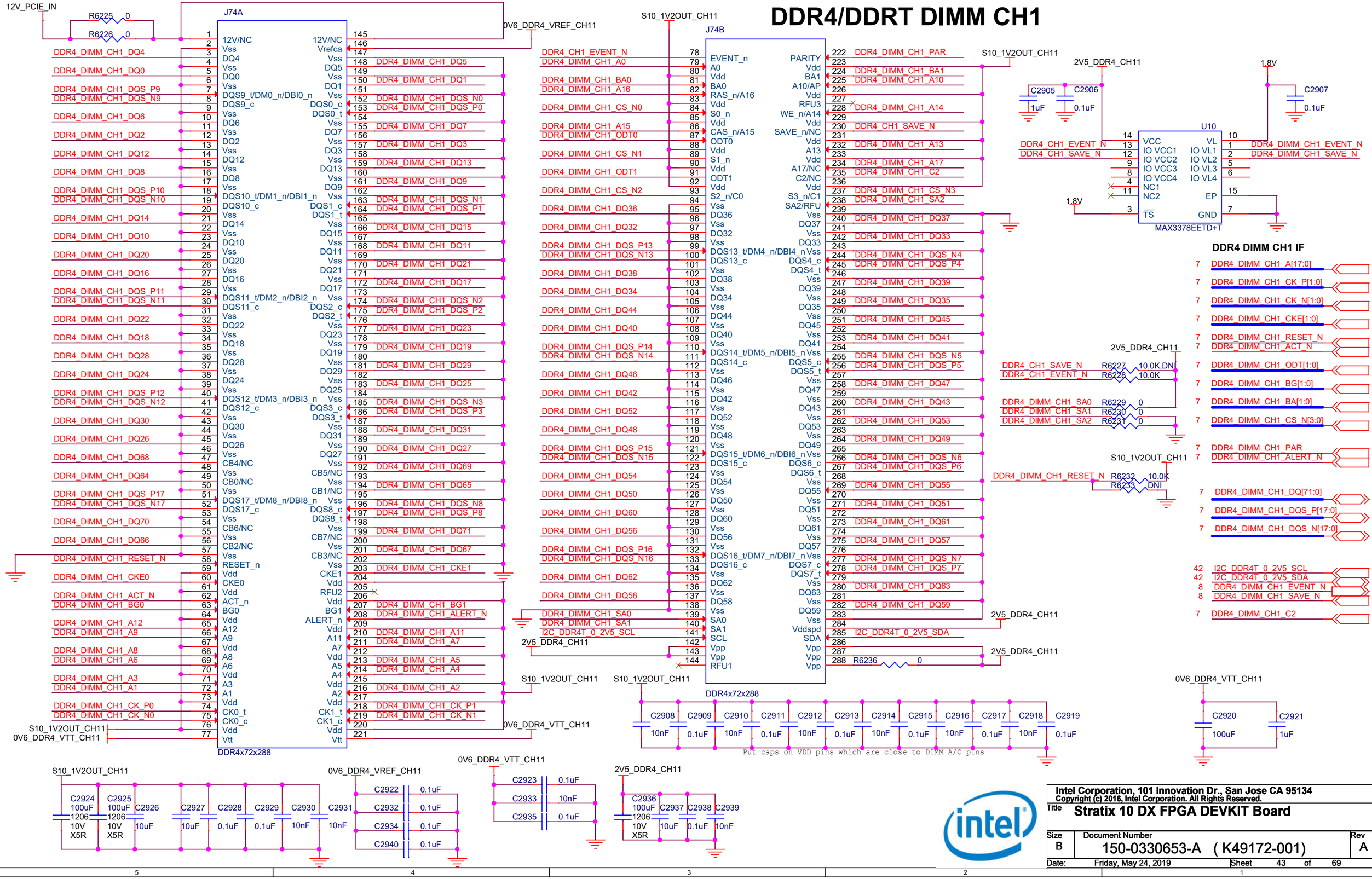

Intel Corporation, 101 Innovation Dr., San Jose CA 95134
Copyright (c) 2016, Intel Corporation. All Rights Reserved.

Title	Stratix 10 DX FPGA DEVKIT Board	
Size: B	Document Number: 150-0330653-A (K49172-001)	Rev: A
Date: Friday, May 24, 2019	Sheet 43 of 69	

Power S10_VCCH_GXE

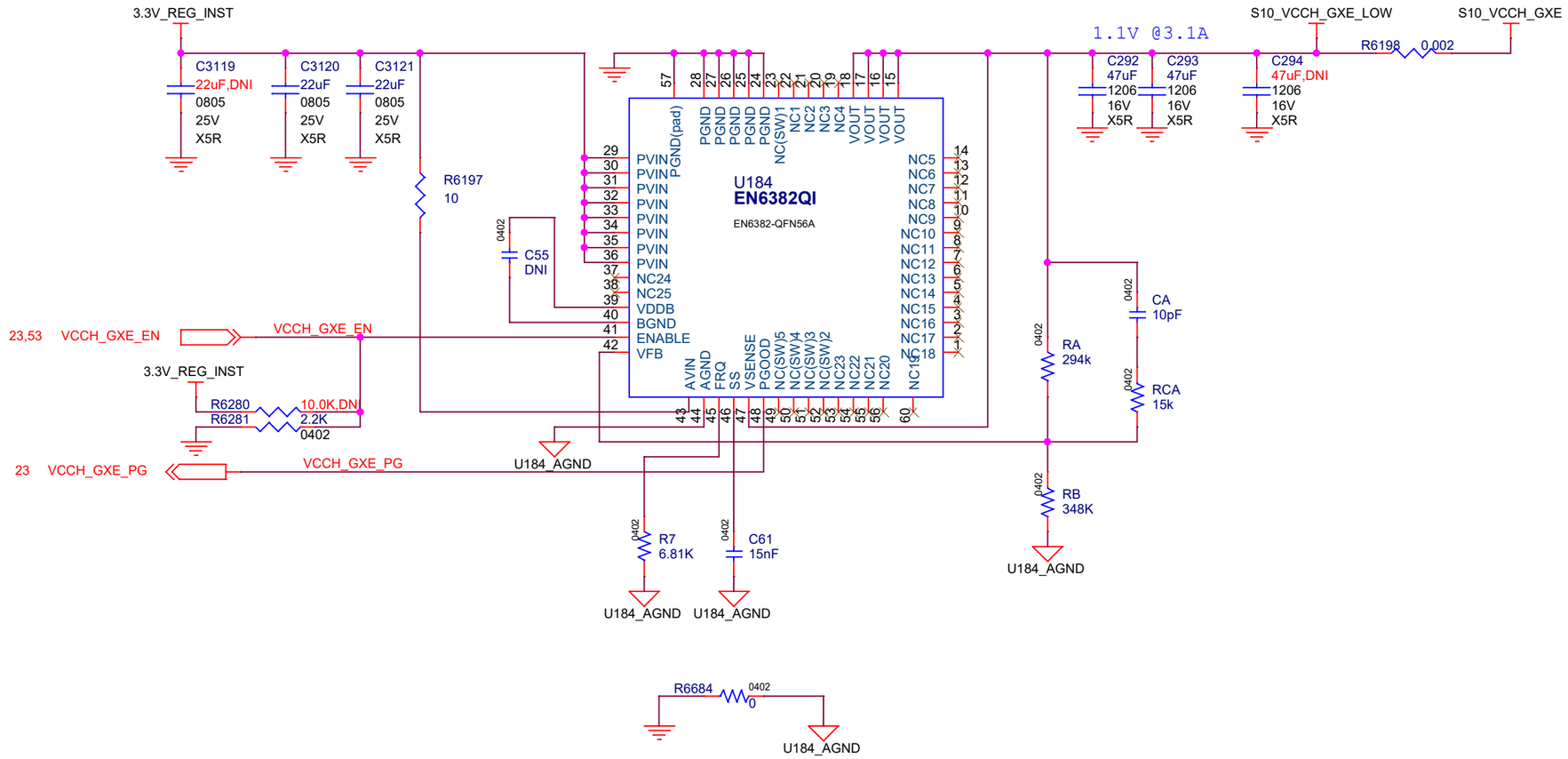

Intel Corporation, 101 Innovation Dr., San Jose CA 95134
Copyright (c) 2016, Intel Corporation. All Rights Reserved.

Title	Stratix 10 DX FPGA DEVKIT Board	
Size: B	Document Number: 150-0330653-A (K49172-001)	Rev: A
Date: Friday, May 24, 2019	Sheet 44 of 69	

Power S10_VCCH_GXP, VCCCLK_GXP

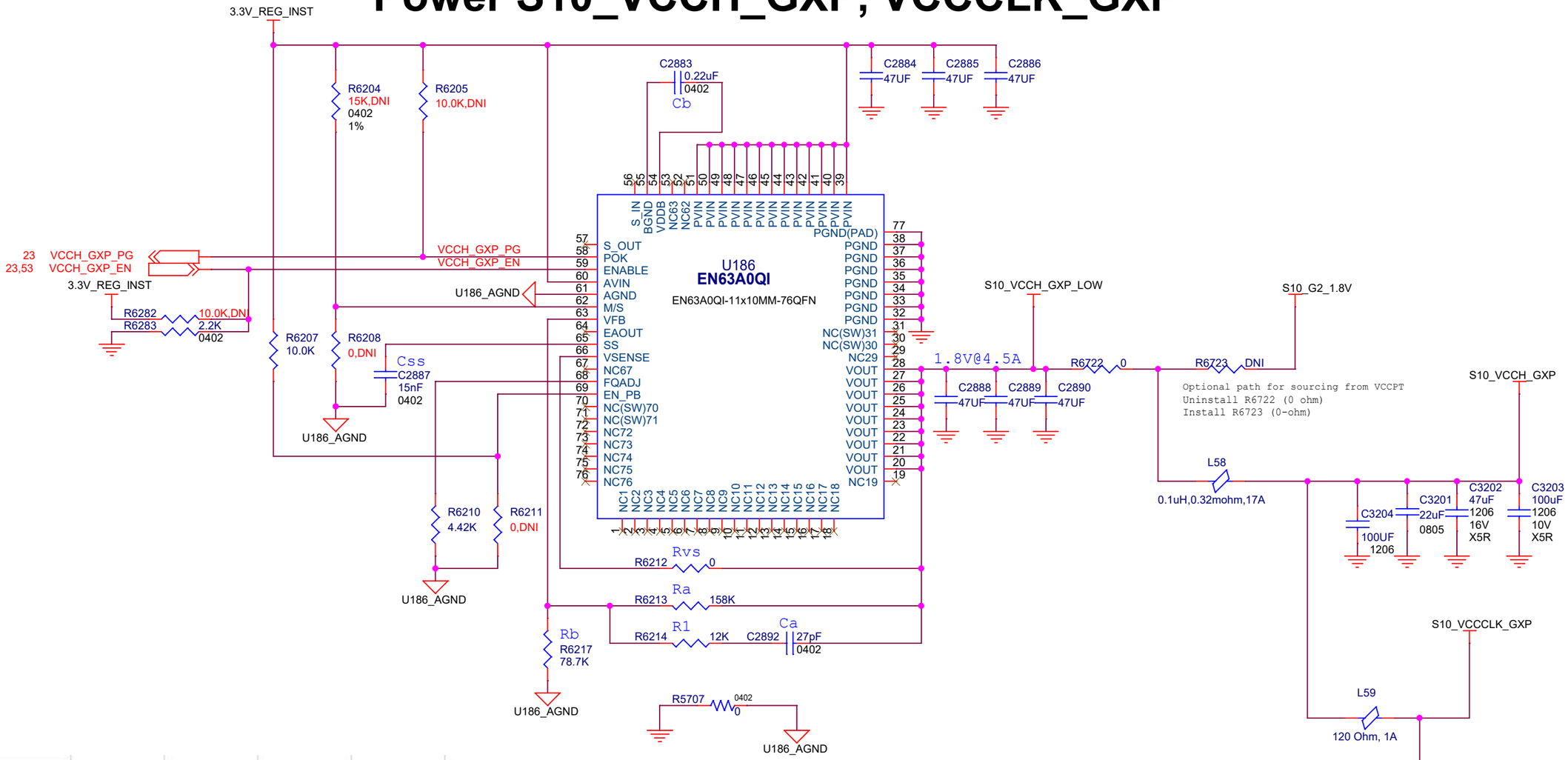

VIN = 3.3V				
Vout	**RA**	**RB**	**CA**	**R1**
1.0V	158k	237k	27pF	12k
1.2V	158k	158k	27pF	12k
1.5V	158k	105k	27pF	12k
1.8V	158k	78.7K	27pF	12k
2.5V	158k	49.9K	27pF	12k

Intel Corporation, 101 Innovation Dr., San Jose CA 95134
Copyright (c) 2016, Intel Corporation. All Rights Reserved.

Title: **Stratix 10 DX FPGA DEVKIT Board**

Size	Document Number	Rev
B	150-0330653-A (K49172-001)	A

Date: Thursday, May 30, 2019 Sheet 45 of 69

Power - S10_VCCCLK_GXE

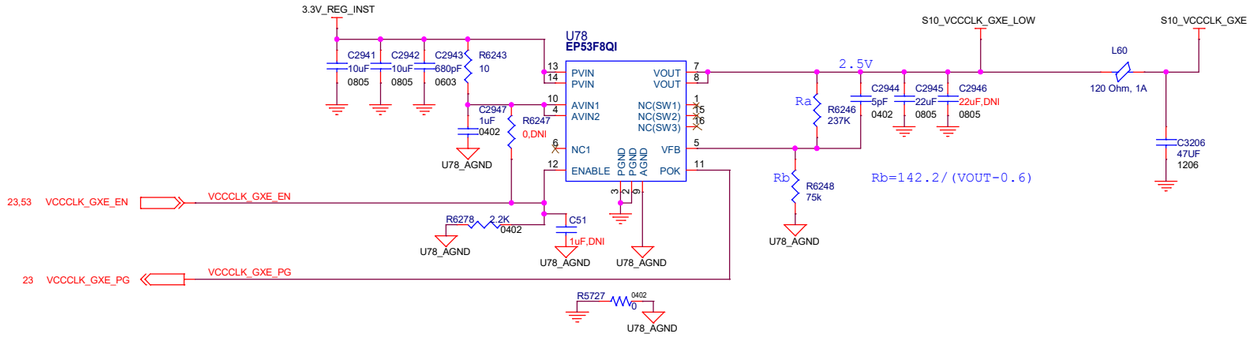

V_{FB} = 0.6V, R_A (R2) = 237k

$$R_B = \frac{V_{FB} \times R_A}{V_{OUT} - V_{FB}}$$

VOUT	RA (R2)	RB (R4)
1.0V	237k	357k
1.2V	237k	237k
1.5V	237k	158k
1.8V	237k	118k
2.5V	237k	75k
3.3V	237k	52.3k

Intel Corporation, 101 Innovation Dr., San Jose CA 95134
Copyright (c) 2016, Intel Corporation. All Rights Reserved.

Title: Stratix 10 DX FPGA DEVKIT Board

Size: C | Document Number: 150-0330653-A (K49172-001) | Rev: A

Date: Friday, May 24, 2019 | Sheet 46 of 69

BLANK

Intel Corporation, 101 Innovation Dr., San Jose CA 95134
Copyright (c) 2016, Intel Corporation. All Rights Reserved.

Title **Stratix 10 DX FPGA DEVKIT Board**

Size	Document Number	Rev
B	150-0330653-A (K49172-001)	A

Date: Friday, May 24, 2019 Sheet 47 of 69

BLANK

Intel Corporation, 101 Innovation Dr., San Jose CA 95134
Copyright (c) 2016, Intel Corporation. All Rights Reserved.

Title	**Stratix 10 DX FPGA DEVKIT Board**	
Size: B	Document Number: K53732-100-A	Rev: A
Date: Friday, May 24, 2019	Sheet 48 of 69	

12V_AUX2 Hot Swap

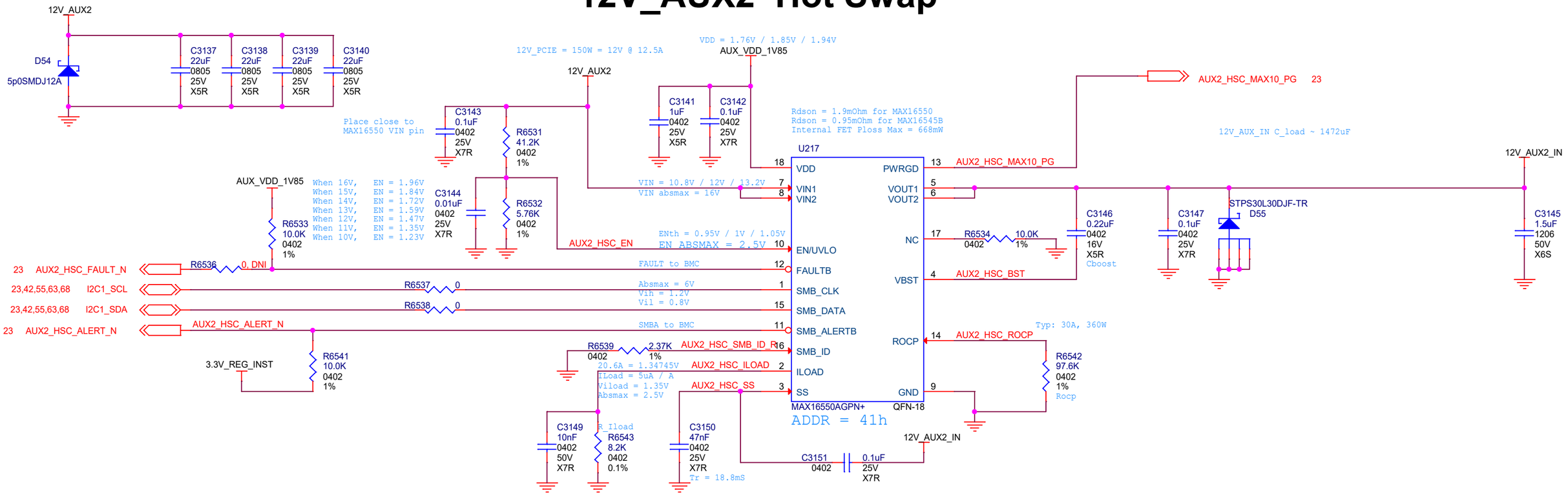

Power On Switch
(For external power supply)

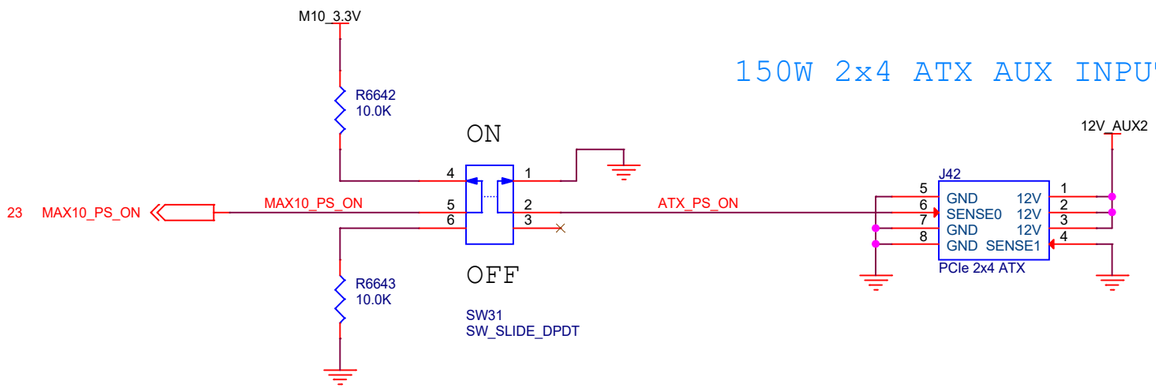

150W 2x4 ATX AUX INPUT POWER CONNECTOR

Intel Corporation, 101 Innovation Dr., San Jose CA 95134
Copyright (c) 2016, Intel Corporation. All Rights Reserved.

Title	Stratix 10 DX FPGA DEVKIT Board	
Size	Document Number: 150-0330653-A (K49172-001)	Rev: A
Date: Friday, May 24, 2019	Sheet 49 of 69	

Power - S10 VCCPT & 1.8V

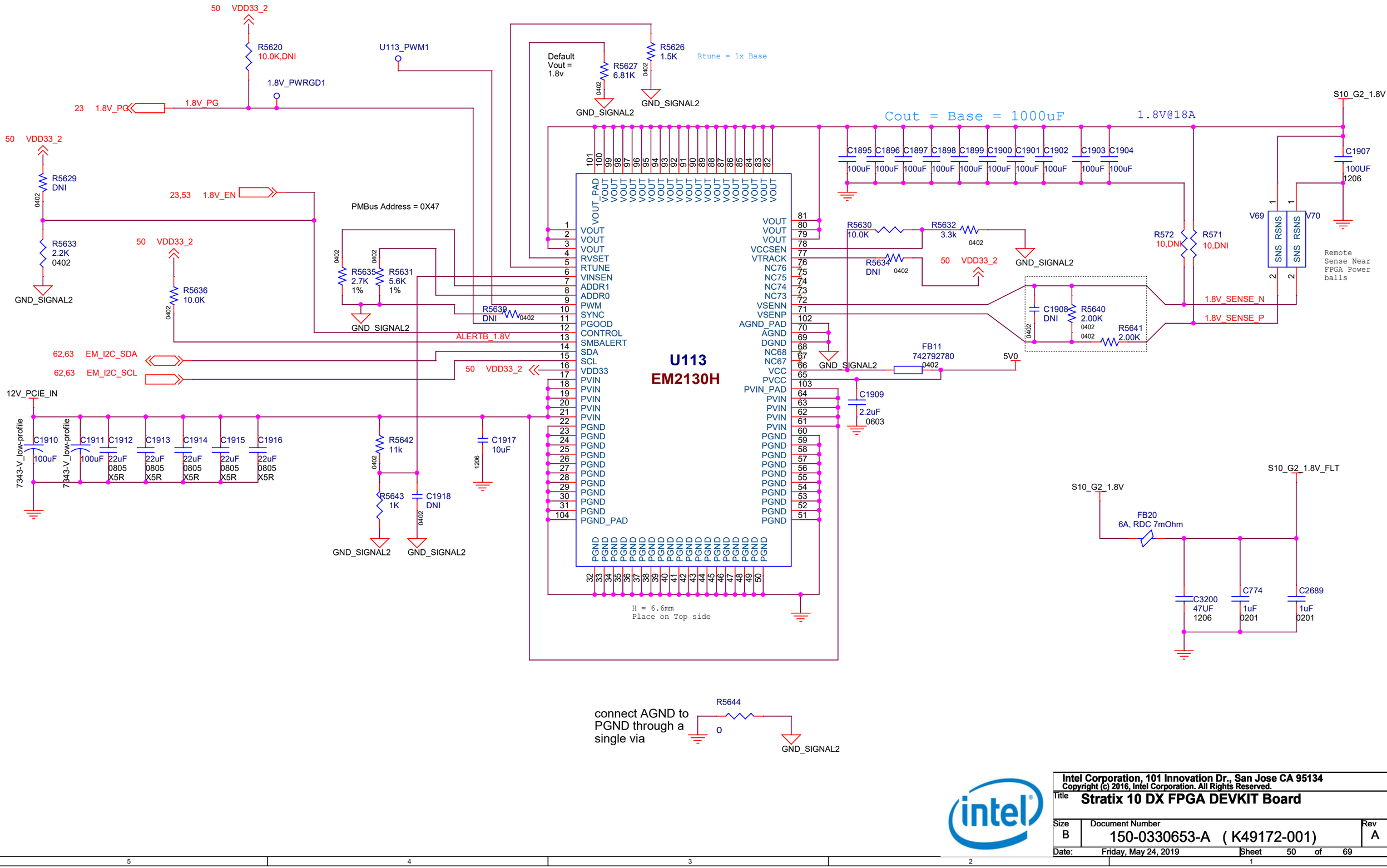

Intel Corporation, 101 Innovation Dr., San Jose CA 95134
Copyright (c) 2016, Intel Corporation. All Rights Reserved.

Title	Stratix 10 DX FPGA DEVKIT Board	
Size: B	Document Number: 150-0330653-A (K49172-001)	Rev: A
Date: Friday, May 24, 2019	Sheet 50 of 69	

Power S10_VCCIO_1V8

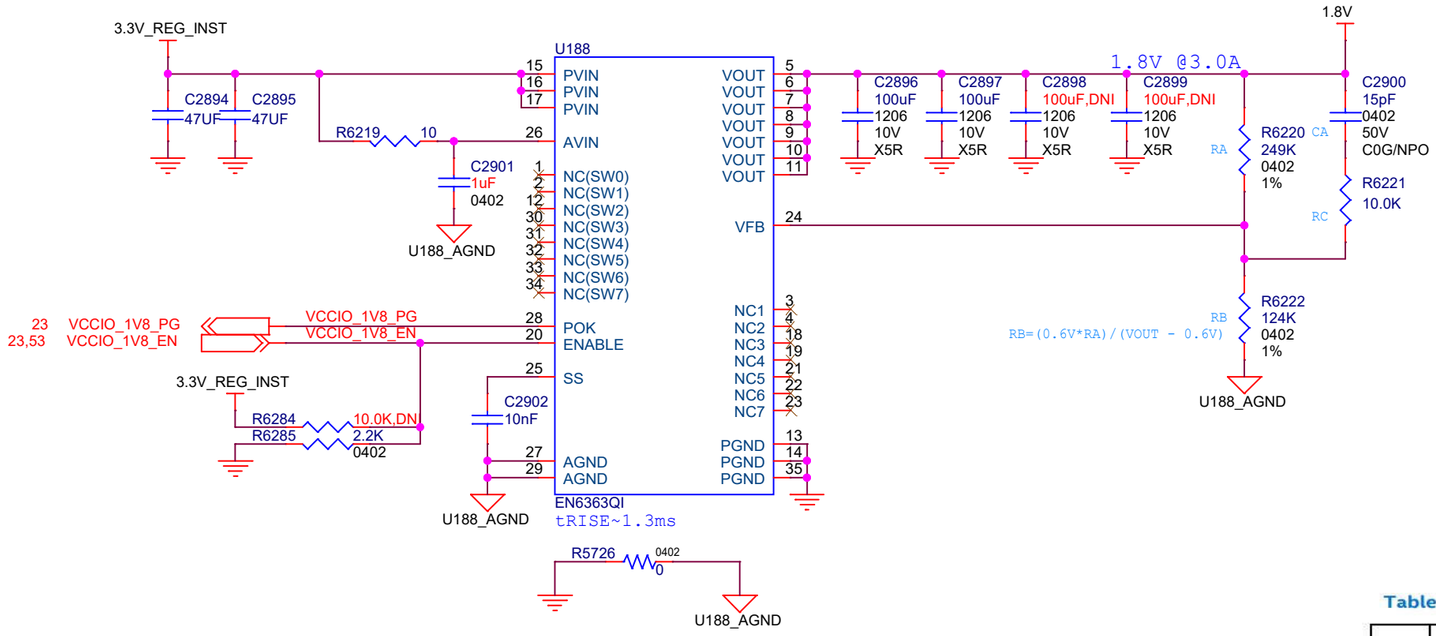

Table 1: External Compensation Recommendations

VIN	VOUT	RB	CA	RA	RC	COUT (0805)
3.3V	1.0V	374kΩ	18pF	249kΩ	10kΩ	2 x 100µF
	1.2V	249kΩ	15pF			
	1.5V	165kΩ	15pF			
	1.8V	124kΩ	15pF			
	2.5V	78.7kΩ	12pF			
5V	1.0V	374kΩ	15pF	249kΩ	10kΩ	2 x 100µF
	1.2V	249kΩ	15pF			
	1.5V	165kΩ	15pF			
	1.8V	124kΩ	12pF			
	2.5V	78.7kΩ	12pF			
	3.3V	54.9kΩ	10pF			

Intel Corporation, 101 Innovation Dr., San Jose CA 95134
Copyright (c) 2016, Intel Corporation. All Rights Reserved.

Title: **Stratix 10 DX FPGA DEVKIT Board**

Size	Document Number	Rev
B	150-0330653-A (K49172-001)	A

Date: Friday, May 24, 2019 Sheet 51 of 69

S10 Decoupling

S10_VCC

C2476 C2478 C2481 C2482 C2483 C2484 C2485 C2486 C2490 C2491 C2492 C2493 C2494 C2495 C2496 C2497 C2498 C2499 C1457
1uF 0201

C2526 C2527 C2528 C2529 C2530 C2531 C2532 C2533 C2534 C2535 C2536 C2538 C2539 C2541 C2542 C2543 C2545 C2546 C2547
1uF 0201

C2575 C2577 C2580 C2581 C2582 C2583 C2584 C2586 C2587 C2588 C2589 C2591 C2593 C2594 C2595 C2597 C2598 C2599 C2549 C2765
1uF 0201

C2613 C2614 C2615 C2616 C2618 C2620 C2621 C2623 C2624 C2625 C2627 C2628 C2629 C2630 C2631 C2632 C2633 C2634 C2635 C2636
1uF 0201

C2662 C2663 C2664 C2666 C2667 C2668 C2669 C2670 C2672 C2673 C2675 C2677 C2678 C2681 C2682 C2683 C2684 C2685 C2686 C2764
1uF 0201

C2711 C2712 C2713 C2715 C2716 C2717 C2718 C2719 C2720 C2723 C2724 C2726 C2727 C2728 C2729 C2730 C2733 C2734 C2735 C1459
1uF 0201

C2741 C2742 C2744 C2745 C2746 C2747 C2748 C2750 C2751 C2752 C2753 C2754 C2755 C2756 C2757 C2758 C2759 C2760 C2762 C2763
1uF 0201

C2778 C2779 C2781 C2782 C2783 C2786 C2787 C2790 C2792 C2793 C2794 C2795 C2797 C2802
1uF 0201

C2821 C2822 C2826 C2827 C2829 C2830 C2831 C2832 C2834 C2837 C2838 C2839 C2840 C2841 C2842 C2843 C1458
1uF 0201

S10_VCCRT_GXE

C2012 C751 C2012 C752 C2012 C753 C822 22uF 0603 C341 10uF 0603 C2408 4.7uF 0603 C2409 4.7uF 0603 C756 C757 C764 C765 C766 C767 C3089 C3090 C3091 C3092 C3093 C3094 C3095 C3096 C3108
100uF 1uF 0201

1V2_DDR4_CH00

C812 C815 22uF 0603 C331 10uF 0603 C332 10uF 0603 C333 10uF 0603 C1403 4.7uF C0201 C1416 4.7uF C0201 C1413 4.7uF C0201 C1417 C1419 C1552 C1555 C1639 C1638 C1640 C817 C814 C834 C833 C835 C1463 C1462
100uF C2012 1uF 0201

1V2_DDR4_CH11

C818 C820 C336 C334 C335 C1660 C1661 C1665 C1666 C1667 C1657 C1656 C1659 C1658 C1645 C1655 C830 C819 C837 C836 C838 C1464 C1465
100uF C2012 1uF 0201

0p9V

C2012 C842 C2012 C841 C2012 C844 C2012 C843 C2012 C871 C2012 C575 C2012 C576 C2012 C577 C2012 C578 C2012 C579 C804 22uF 0603 C337 10uF 0603 C2405 4.7uF 0603 C2406 4.7uF 0603
100uF

C2500 C2501 C2502 C2503 C2504 C2507 C2508 C2510 C2511 C2512 C2513 C2515 C2516 C2517 C2518 C2519 C2520 C2521 C2522 C2523 C2524
C2550 C2552 C2553 C2555 C2556 C2557 C2558 C2559 C2560 C2562 C2563 C2564 C2565 C2567 C2568 C2570 C2571 C2572 C2573 C2574
C2600 C2601 C2602 C2603 C2604 C2605 C2606 C2607 C2608 C2609 C2610 C2611 C2612
1uF 0201

S10_G2_1.8V

Place near S10 VCCPT

C773 1uF 0201 C775 C776 C784 C791

S10_G2_1.8V

C2638 C2639 C2640 C2641 C2643 C2644 C2645 C739 C740 C2647 C2648 C2649 C3097 C3100 C3101
1uF 0201

S10_G2_1.8V

C2691 C2692 C2693 C2694 C2696 C2698
1uF 0201

S10_VCCCLK_GXP

C798 22uF 0603 C2404 4.7uF 0603 C3081 C3082 C3083 C3084 C3085 C3086 C3087 C3088
1uF 0201

S10_G2_1.8V

C2012 C805 100uF C806 100uF C2012 C816 22uF 0603 C821 22uF 0603 C620 10uF 0603 C625 10uF 0603 C628 10uF 0603 C621 4.7uF C0201 C622 4.7uF C0201 C623 4.7uF C0201 C624 1uF 0201 C626 1uF 0201

S10_VCC

C2012 C603 100uF C2012 C604 100uF

C540 330uF 7343-V_LOW-PROFILE C541 330uF 7343-V_LOW-PROFILE C542 330uF 7343-V_LOW-PROFILE C543 330uF 7343-V_LOW-PROFILE C544 330uF 7343-V_LOW-PROFILE C567 C568 C569 C570 C571 C572 C574
220uF 1206

C545 C546 C547 C548 C549 C550 C551 C552 C553 C554 C555 C556 C557 C558 C559 C560 C561 C562 C563 C564 C565 C566 C573
220uF 1206

S10_VCC

C2012 C585 C2012 C586 C2012 C587 C2012 C588 C2012 C589 C2012 C590 C2012 C591 C2012 C592 C2012 C593 C2012 C594 C2012 C595 C2012 C596 C2012 C597 C2012 C598 C2012 C599 C2012 C600 C2012 C601 C2012 C602
100uF

C808 22uF 0603 C811 22uF 0603 C810 22uF 0603 C813 22uF 0603 C311 10uF 0603 6.3V X6S C320 10uF 0603 6.3V X6S C321 10uF 0603 6.3V X6S C322 10uF 0603 6.3V X6S C326 10uF 0603 6.3V X6S C327 10uF 0603 6.3V X6S C328 10uF 0603 6.3V X6S C329 10uF 0603 6.3V X6S C330 10uF 0603 6.3V X6S

0p9V

C2012 C670 C2012 C671 C2012 C672 C2012 C673 C2012 C674 C2012 C675 C2012 C676
100uF

C748 C749 C754 C755 22uF 0603
C352 C353 10uF 0603
C354 10uF 0603

S10_VCCRT_GXP

C714 C715 C716 C717 C718 C719 C720 C721 C722 C726 C727
1uF 0201

S10_VCCRT_GXP

C728 C745 C746 C3054 C3055 C3056 C3057 C3058 C3059 C3061
1uF 0201

S10_VCCRT_GXP

C3062 C3078 C687 C688 C3067 C3068 C3069 C3070 C3071 C3106
1uF 0201

S10_VCCRT_GXP

C684 C3065 C3072 C685 C686 C3066 C3063 C3064 C3107 C3077 C3076
1uF 0201

S10_VCCH_GXE

C2390 220uF C3528 C2391 220uF C3528 C2012 C730 100uF C2012 C731 100uF C2012 C732 100uF C744 22uF 0603 C747 22uF 0603 C338 10uF 0603 C733 10uF 0402 C3075 1uF 0201 C2395 1uF 0201 C2398 1uF 0201 C750 1uF 0201 C3079 1uF 0201

VCCRTPLL_GXE

C3073 1uF 0201 C3074 1uF 0201

S10_VCCCLK_GXE

C3080 1uF 0201

S10_VCCH_GXP

C3026 C3027 C3028 C3029 C3030 C3031 C3032
1uF 0201

S10_VCCH_GXP

C3033 C3034 C3035 C3036 C3037 C3038 C3039
1uF 0201

S10_VCCH_GXP

C3040 C3041 C3042 C3043 C3044 C3045 C3046
1uF 0201

S10_VCCH_GXP

C3047 C3048 C3049 C3050 C3051 C3052 C3053
1uF 0201

1.8V

C797 22uF 0603 C629 10uF 0603 C2407 4.7uF 0603 C2803 C2807 C2808 C2810 C2811 C2813 C2845 C2846 C2847 C2848
1uF 0201

0V6_DDR4_VREF_CH11

C795 22uF 0603 C2402 4.7uF C0201 C2857 C2858 C2859 C2860 C2861 C2862
1uF 0201

0V6_DDR4_VREF_CH00

C796 22uF 0603 C2851 C2852 C2853 C2854 C2855 C2856
1uF 0201

Intel Corporation, 101 Innovation Dr., San Jose CA 95134
Copyright (c) 2016, Intel Corporation. All Rights Reserved.

Title	Stratix 10 DX FPGA DEVKIT Board	
Size C	Document Number 150-0330653-A (K49172-001)	Rev A
Date: Friday, May 24, 2019	Sheet 52 of 69	

Fast Power-Down Discharge

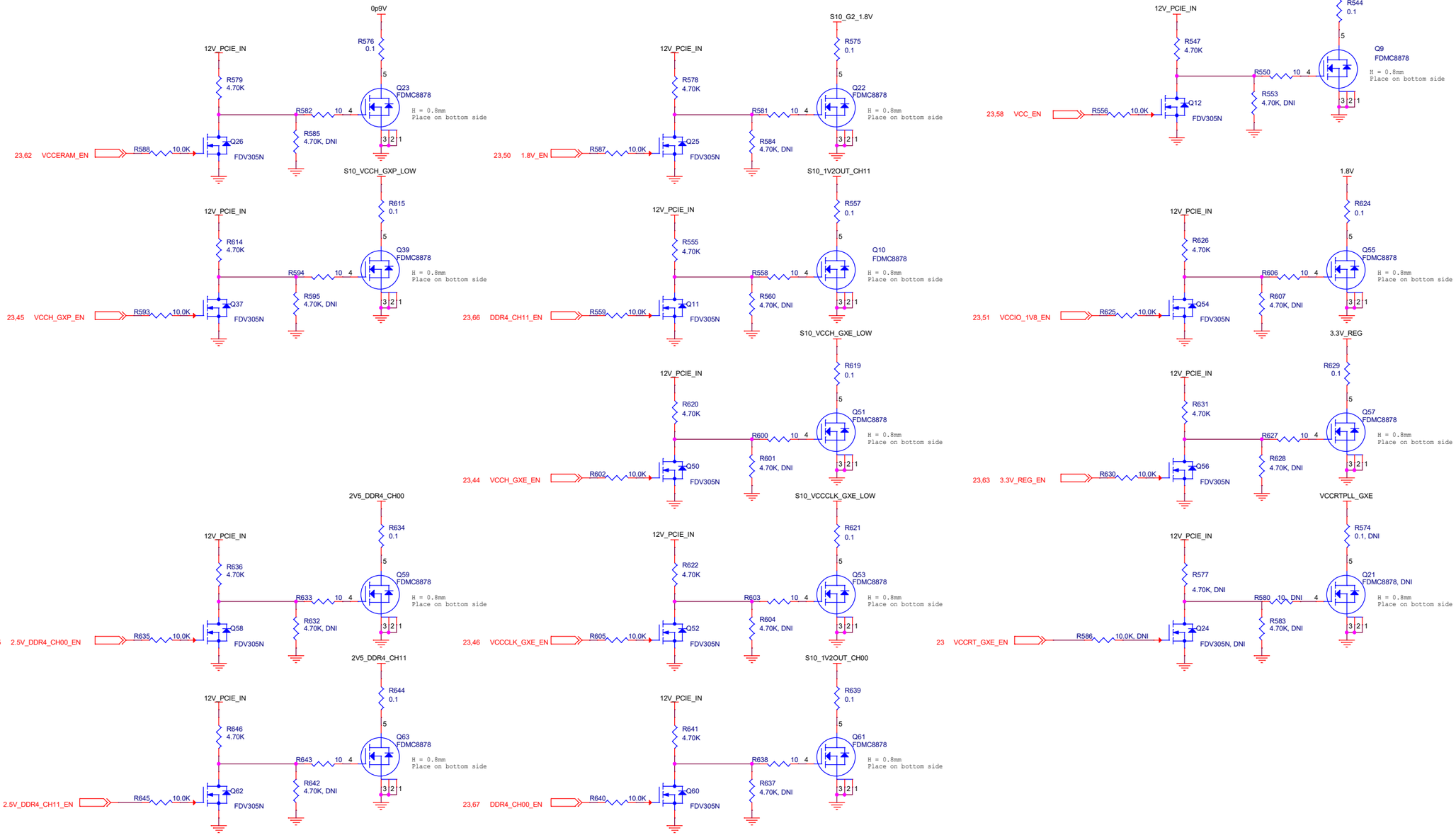

Intel Corporation, 101 Innovation Dr., San Jose CA 95134
Copyright (c) 2016, Intel Corporation. All Rights Reserved.

Title	Stratix 10 DX FPGA DEVKIT Board	
Size C	Document Number 150-0330653-A (K49172-001)	Rev A
Date: Wednesday, June 05, 2019	Sheet 53 of 69	

PCIE_12V to AUX_12V Power Bridge

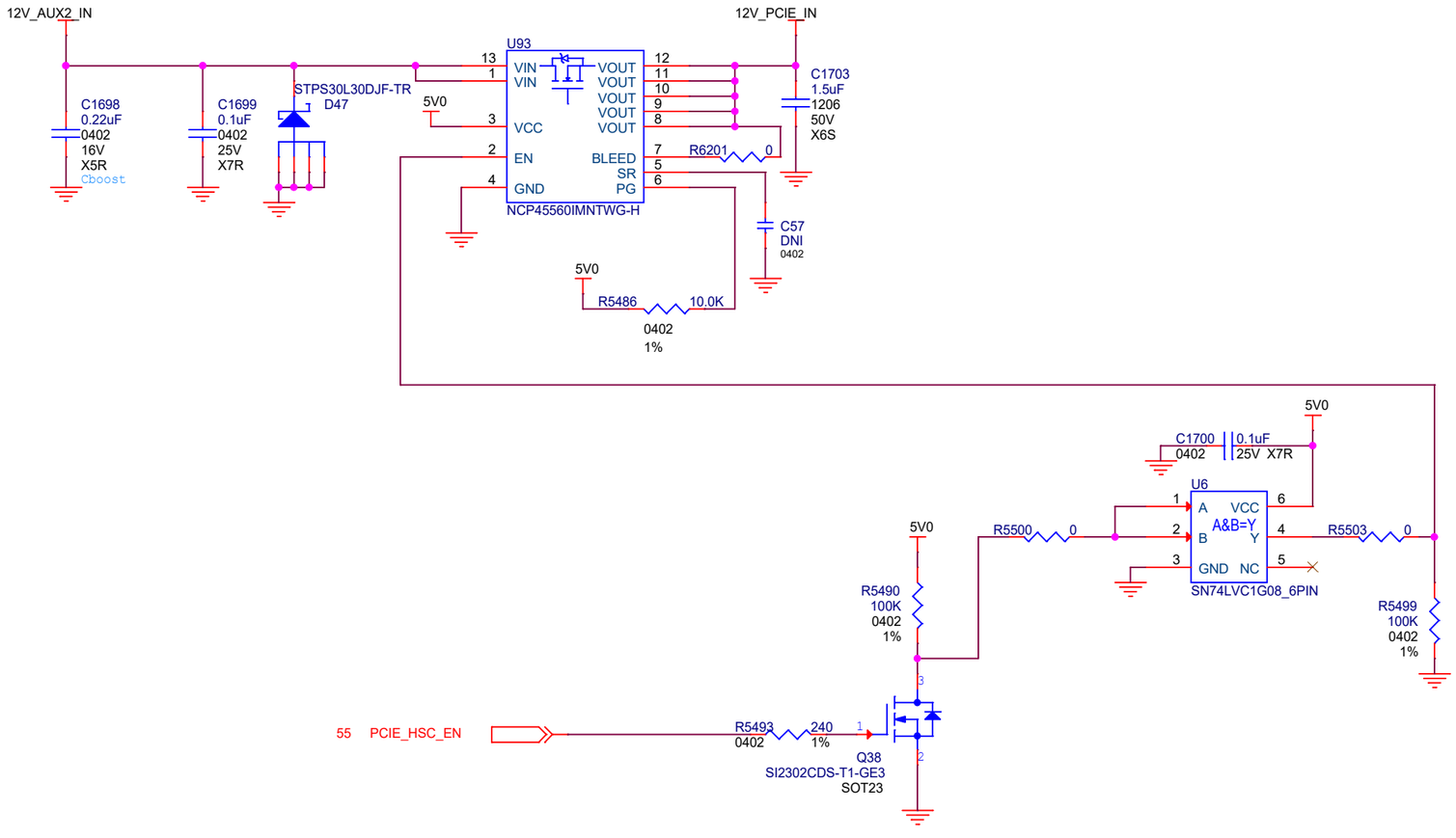

Intel Corporation, 101 Innovation Dr., San Jose CA 95134
Copyright (c) 2016, Intel Corporation. All Rights Reserved.

Title	Stratix 10 DX FPGA DEVKIT Board	
Size: Custom	Document Number: 150-0330653-A (K49172-001)	Rev: A
Date: Friday, May 24, 2019	Sheet 54 of 69	

12V_PCIE Hotswap

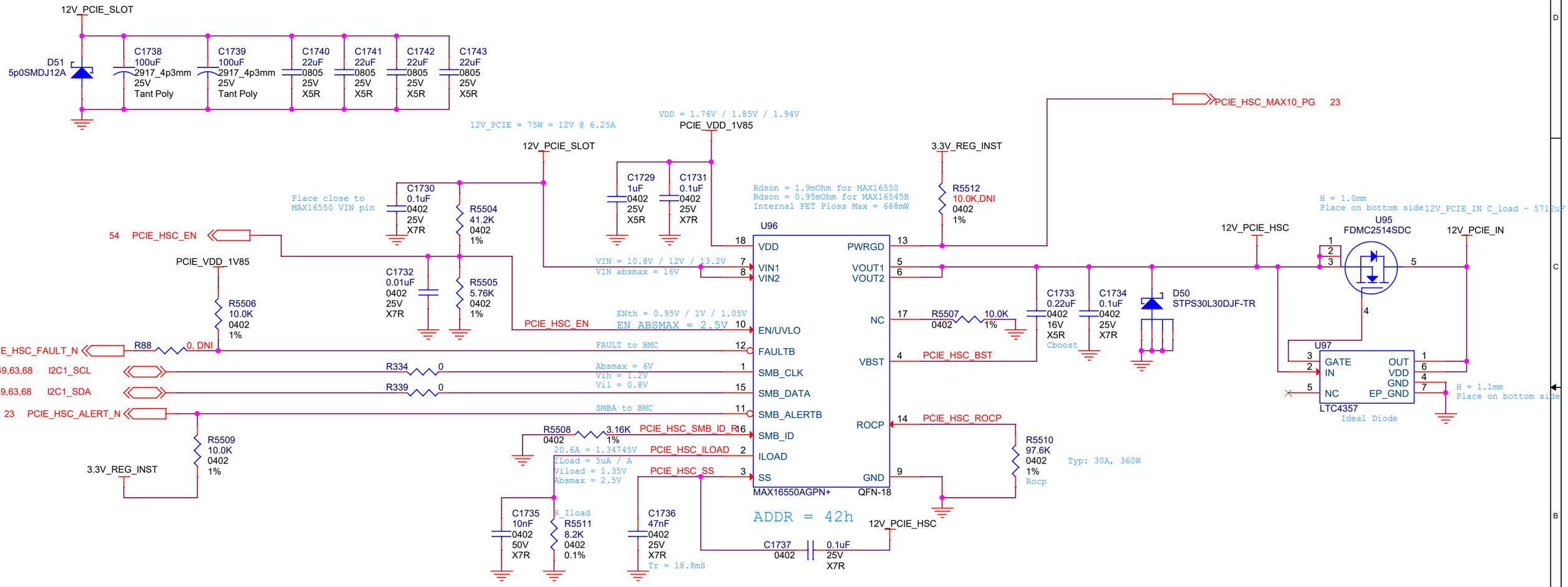

Intel Corporation, 101 Innovation Dr., San Jose CA 95134
Copyright (c) 2016, Intel Corporation. All Rights Reserved.

Title	Stratix 10 DX FPGA DEVKIT Board	
Size: B	Document Number: 150-0330653-A (K49172-001)	Rev: A
Date: Friday, May 24, 2019	Sheet 55 of 69	

Power - Max10

***VOUT CALCULATION**

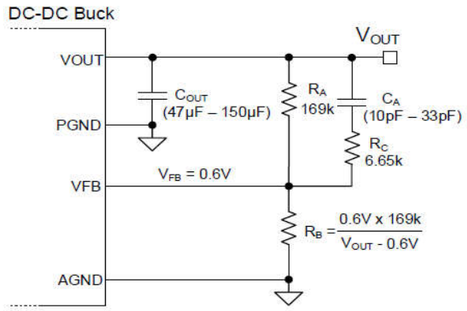

***VOUTL1/2 CALCULATION**

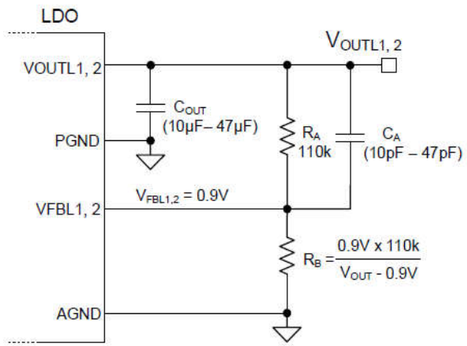

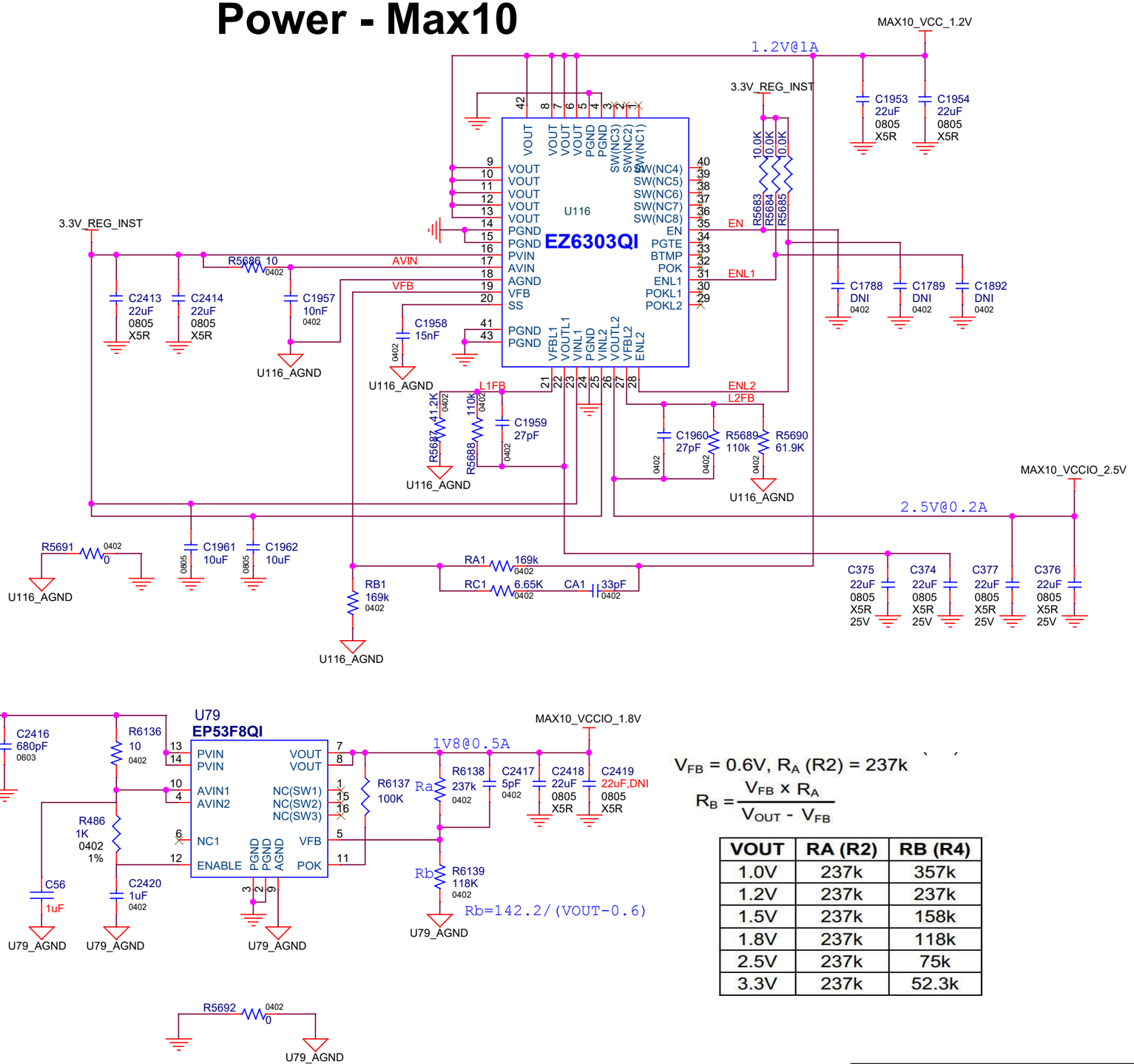

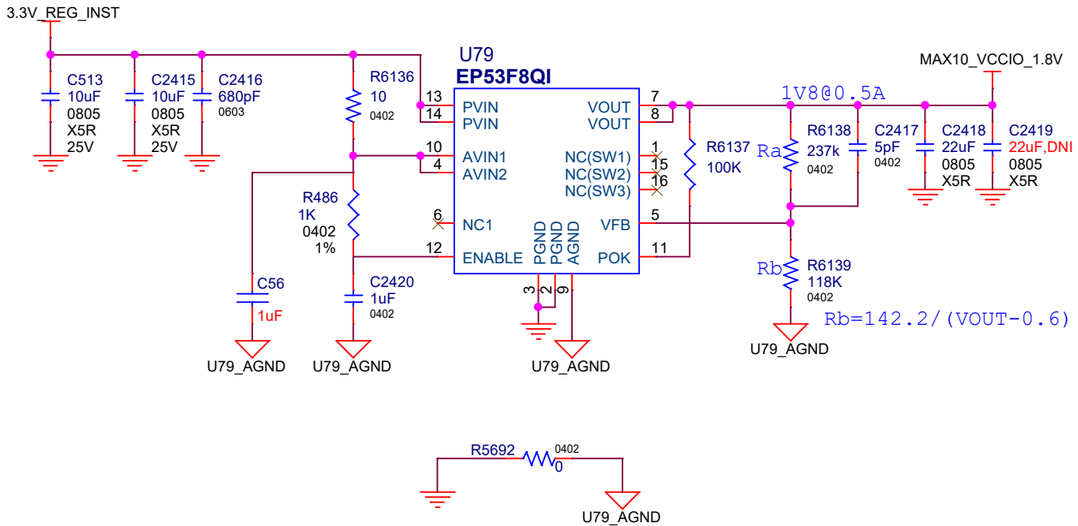

V_{FB} = 0.6V, R_A (R2) = 237k

$$R_B = \frac{V_{FB} \times R_A}{V_{OUT} - V_{FB}}$$

VOUT	RA (R2)	RB (R4)
1.0V	237k	357k
1.2V	237k	237k
1.5V	237k	158k
1.8V	237k	118k
2.5V	237k	75k
3.3V	237k	52.3k

Intel Corporation, 101 Innovation Dr., San Jose CA 95134
Copyright (c) 2016, Intel Corporation. All Rights Reserved.

Title: **Stratix 10 DX FPGA DEVKIT Board**

Size	Document Number	Rev
B	150-0330653-A (K49172-001)	A

Date: Friday, May 24, 2019 Sheet 56 of 69

Power - 5V

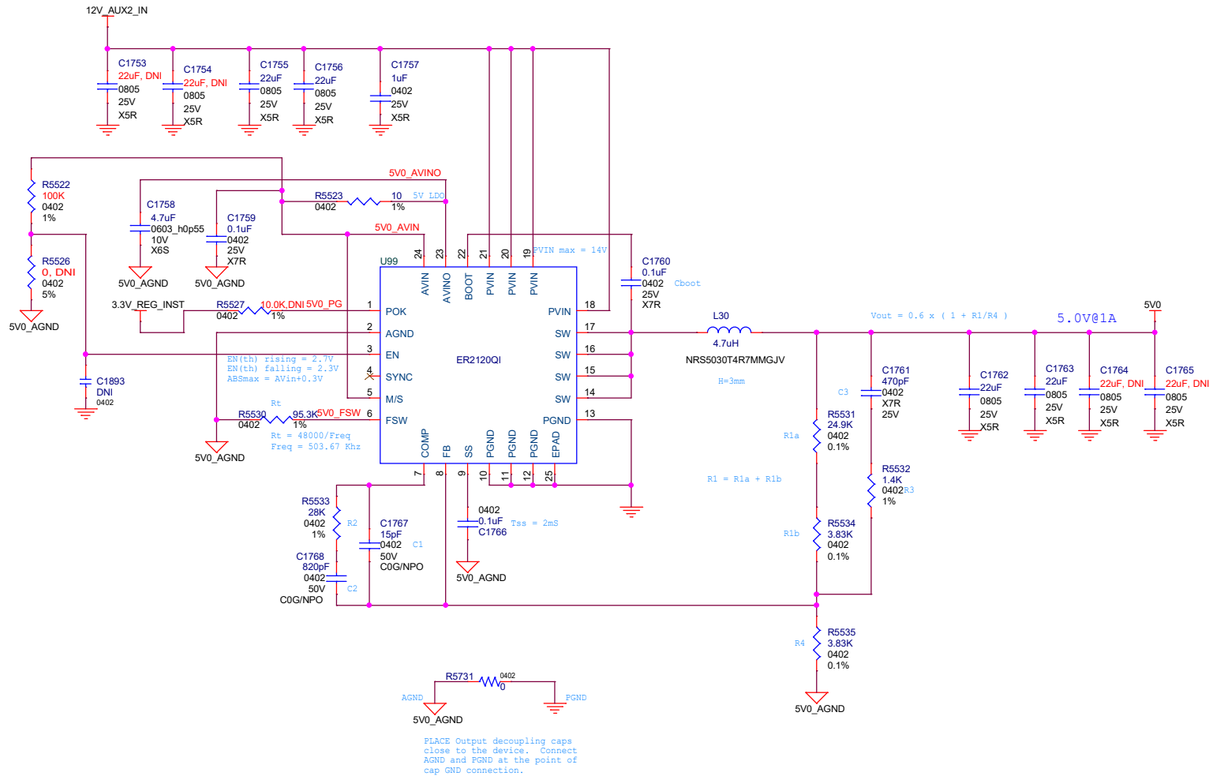

Intel Corporation, 101 Innovation Dr., San Jose CA 95134
Copyright (c) 2016, Intel Corporation. All Rights Reserved.

Title	Stratix 10 DX FPGA DEVKIT Board	
Size: C	Document Number: 150-0330653-A (K49172-001)	Rev: A
Date: Friday, May 24, 2019	Sheet 57 of 69	

Power - VCCcore part1

Notes:
1) Route TMON as daisy-chain at 5x ISL99227 and single trace brought to ISL68137.

2) Route FAULT# as daisy-chain at 5x ISL99227 and single trace brought to ISL68137.

Note: ISL68137 initialization takes 40mS max.

I2C ADDR = 60H

U104
ISL68137IRAZ-T

For PMBus dongle connection

Place close to FPGA

Place close to ISL68137 in layout

Remote sense to FPGA
Diff pair routing

Intel Corporation, 101 Innovation Dr., San Jose CA 95134
Copyright (c) 2016, Intel Corporation. All Rights Reserved.

Title	Stratix 10 DX FPGA DEVKIT Board	
Size: B	Document Number: 150-0330653-A (K49172-001)	Rev: A
Date: Friday, May 24, 2019	Sheet 58 of 69	

Power - VCCcore part2

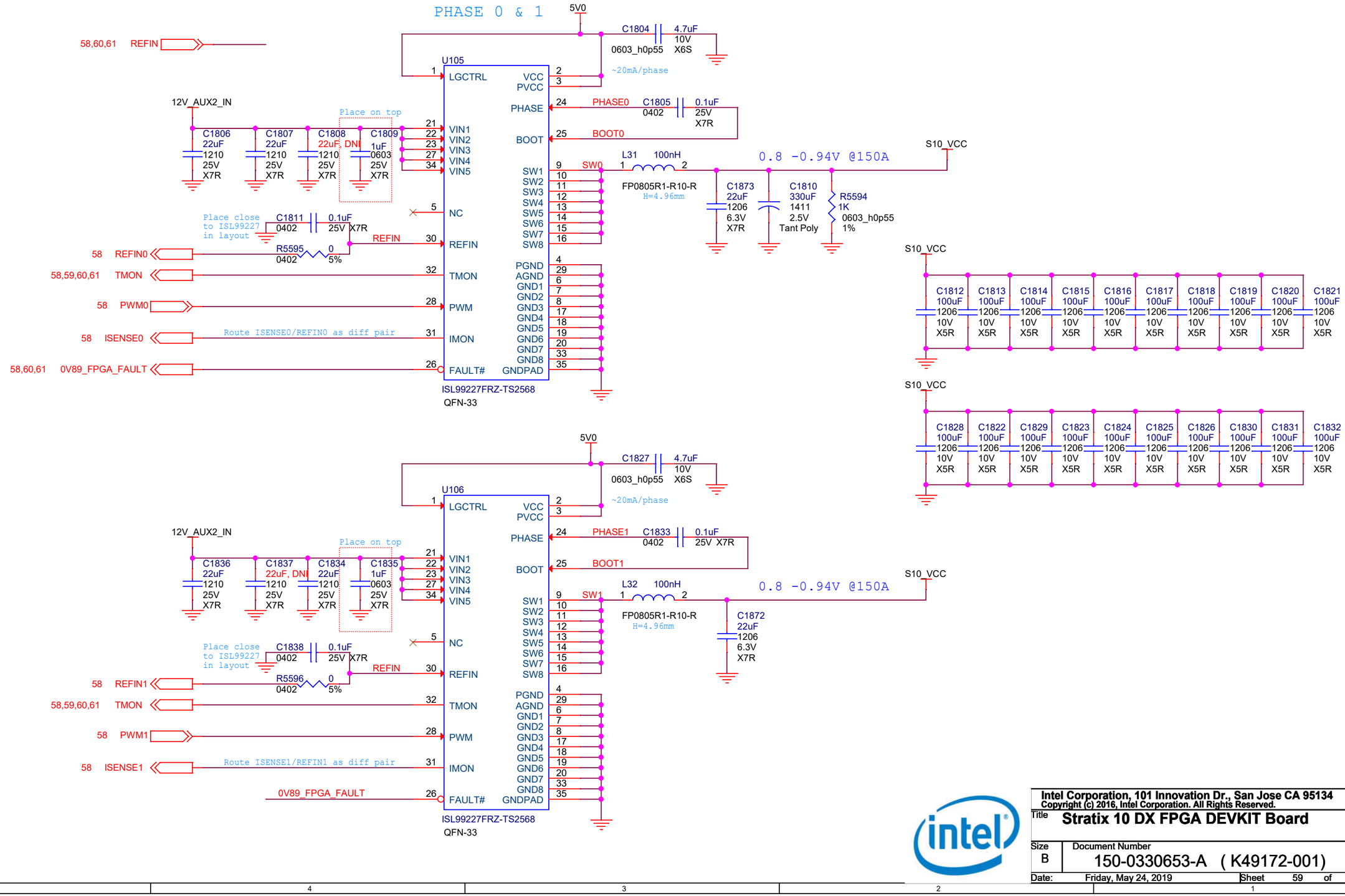

Intel Corporation, 101 Innovation Dr., San Jose CA 95134
Copyright (c) 2016, Intel Corporation. All Rights Reserved.

Title: **Stratix 10 DX FPGA DEVKIT Board**

Size	Document Number	Rev
B	150-0330653-A (K49172-001)	A

Date: Friday, May 24, 2019 Sheet 59 of 69

Power - VCCcore part3

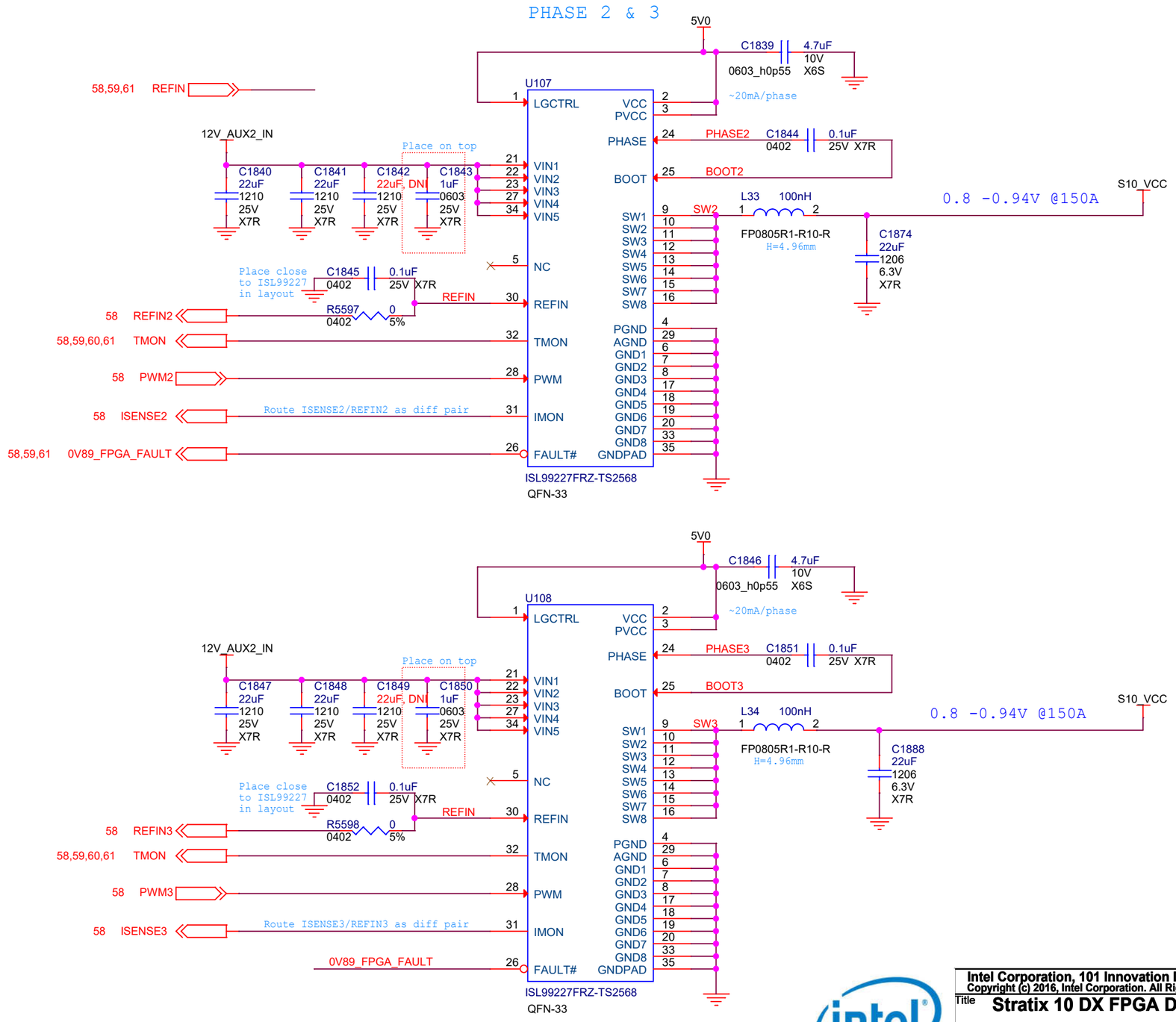

Intel Corporation, 101 Innovation Dr., San Jose CA 95134
Copyright (c) 2016, Intel Corporation. All Rights Reserved.

Title: **Stratix 10 DX FPGA DEVKIT Board**

Size	Document Number	Rev
B	150-0330653-A (K49172-001)	A

Date: Friday, May 24, 2019 Sheet 60 of 69

Power - VCCcore part4

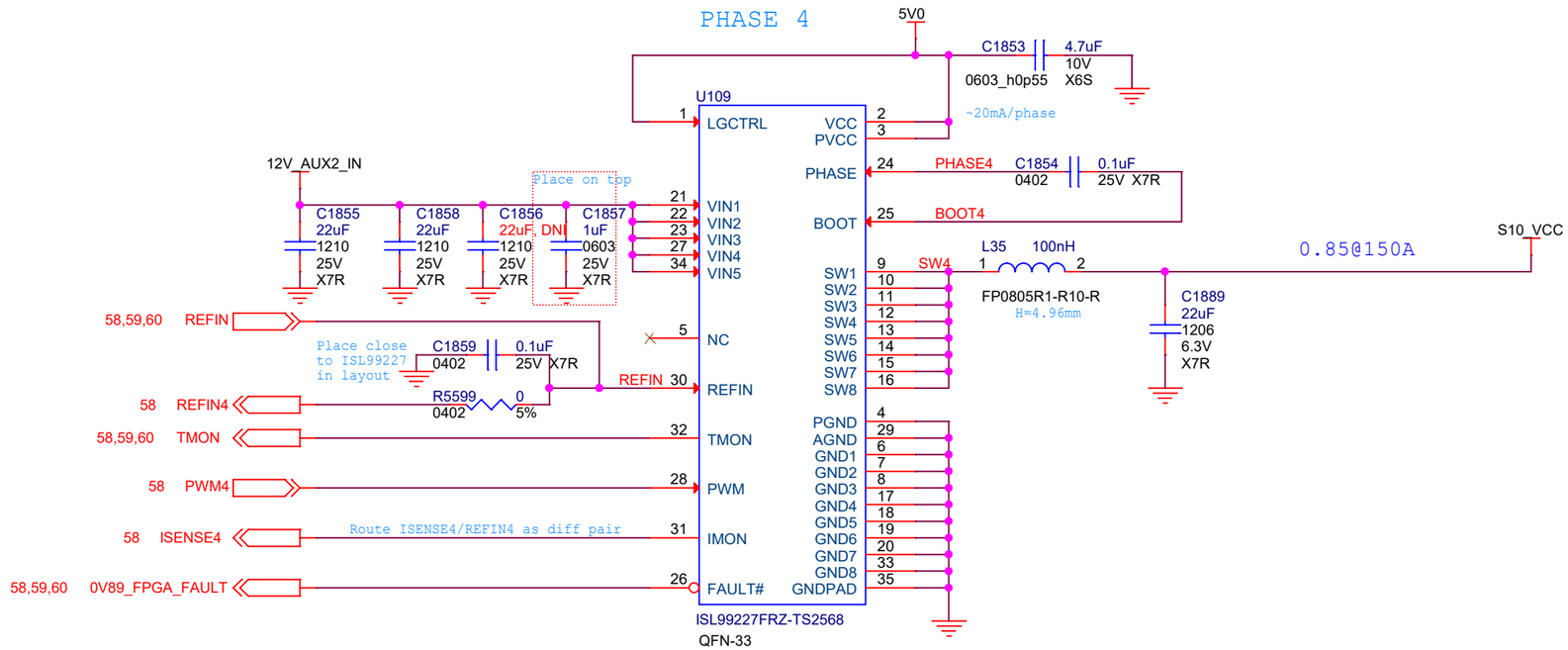

Intel Corporation, 101 Innovation Dr., San Jose CA 95134
Copyright (c) 2016, Intel Corporation. All Rights Reserved.

Title	Stratix 10 DX FPGA DEVKIT Board	
Size: B	Document Number: 150-0330653-A (K49172-001)	Rev: A
Date: Friday, May 24, 2019	Sheet 61 of 69	

Power - VCCERAM, VCCRT_GXP, VCCRT_GXE
VCCPLLDIG_SDM, VCCRTPLL_GXE, VCCFUSE_GXP

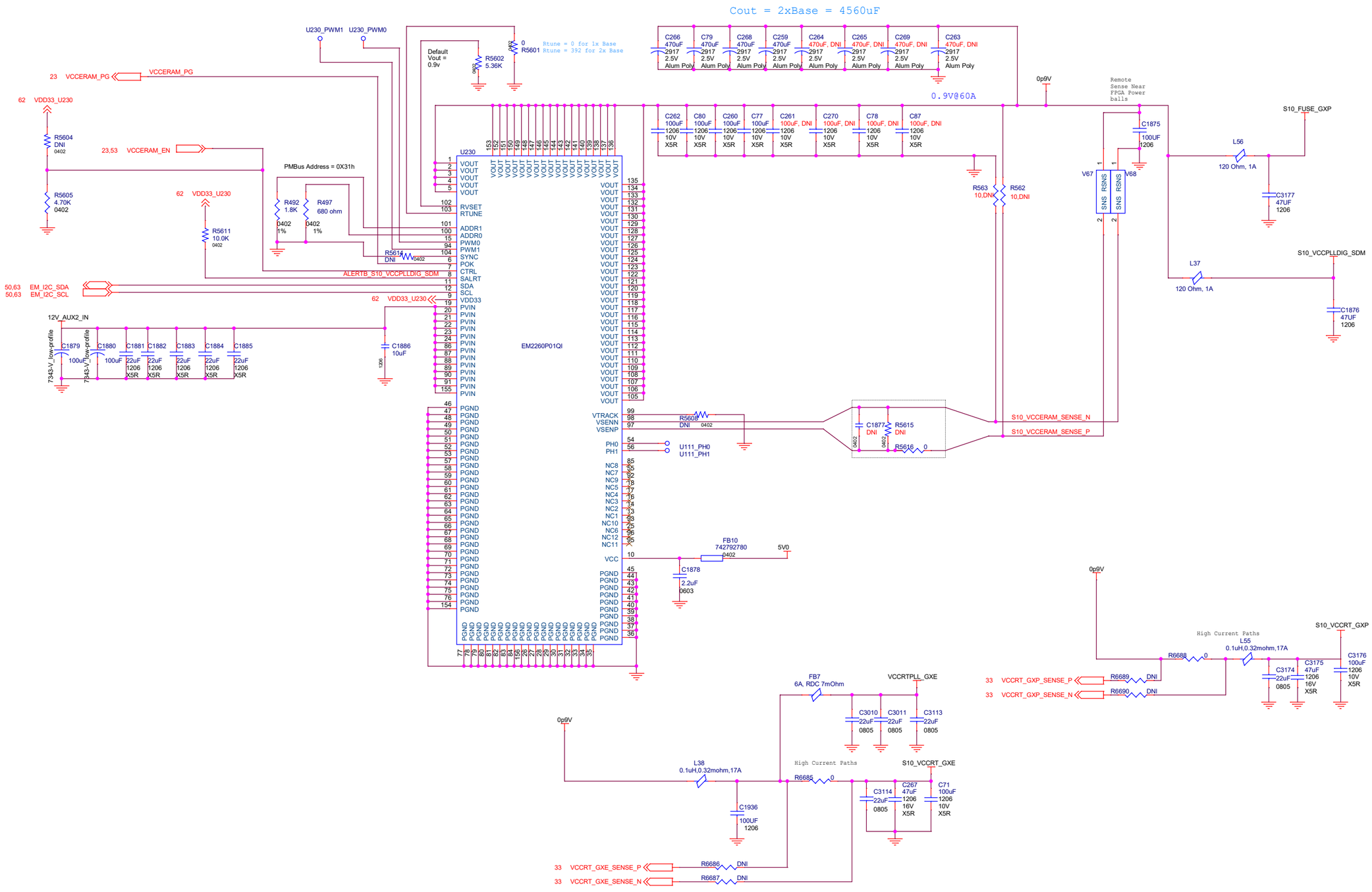

Intel Corporation, 101 Innovation Dr., San Jose CA 95134
Copyright (c) 2016, Intel Corporation. All Rights Reserved.

Title: Stratix 10 DX FPGA DEVKIT BOARD

Size	Document Number	Rev
C	150-0330653-A (K49172-001)	A

Date: Friday, May 24, 2019 Sheet 62 of 69

Power - 3.3V_REG_INST

63 VDD33_5
R5711 10.0K,DNI 0402 1%
VCCT_PWRGD1
23 3.3V_REG_INST_PG
3.3V_REG_INST_PG
U66_PWM1
Default Vout = 3.3V
R5546 576R 0402
R5545 1.5K 0402
Rtune = 1x Base
GND_SIGNAL5
Cout = Base = 1000uF
3.3V@20.9A
3.3V_REG_INST
12V_PCIE_IN
R5547 10.0K
3.3V_REG_INST_EN
R5550 3.4K 0402
PMBus Address = 0X44
63 VDD33_5
R5554 10.0K 0402
R5552 2.7K 1% 0402
R5553 2.7K 1% 0402
R5557 DNI 0402
ALERTB_3.3V_REG_INST
23,42,49,55,68 I2C1_SDA
23,42,49,55,68 I2C1_SCL
R342 0
R343 0
EM_I2C_SDA
EM_I2C_SCL
63 VDD33_5
12V_PCIE_IN
C1778 100uF 7343-V_low-profile
C1779 100uF 7343-V_low-profile
C1780 22uF 0805 X5R
C1781 22uF 0805 X5R
C1782 22uF 0805 X5R
C1783 22uF 0805 X5R
C1784 22uF 0805 X5R
R5560 11k 0402
C1785 10uF 1206
R5561 1K
C1786 DNI 0402
GND_SIGNAL5
63 VDD33_5
R5555 DNI 0402
R5556 DNI 0402
Enpirion Dongle
J17
TSW-103-08-G-S
EM_I2C_SCL 50,62
EM_I2C_SDA 50,62

U101
EM2130H

VOUT_PAD 101 100 99 98 97 96 95 94 93 92 91 90 89 88 87 86 85 84 83 82
1 VOUT
2 VOUT
3 VOUT
4 RVSET
5 RTUNE
6 VINSEN
7 ADDR1
8 ADDR0
9 PWM
10 SYNC
11 PGOOD
12 CONTROL
13 SMBALERT
14 SDA
15 SCL
16 VDD33
17 PVIN
18 PVIN
19 PVIN
20 PVIN
21 PVIN
22 PVIN
23 PGND
24 PGND
25 PGND
26 PGND
27 PGND
28 PGND
29 PGND
30 PGND
31 PGND
32 PGND_PAD
81 VOUT
80 VOUT
79 VOUT
78 VCCSEN
77 VTRACK
76 NC76
75 NC75
74 NC74
73 NC73
72 VSENN
71 VSENP
102 AGND_PAD
70 AGND
69 DGND
68 NC68
67 NC67
66 VCC
65 PVCC
103 PVIN_PAD
64 PVIN
63 PVIN
62 PVIN
61 PVIN
60 PGND
59 PGND
58 PGND
57 PGND
56 PGND
55 PGND
54 PGND
53 PGND
52 PGND
51 PGND_PAD
33 34 35 36 37 38 39 40 41 42 43 44 45 46 47 48 49 50 PGND

H = 6.6mm
Place on Top side

C1770 C1771 C1772 C1773 C1775 C1871 C1870 C1868 C1869 C1867 100UF
C1774 100UF 1206
R5548 10.0K
R5549 3.3k 0402
R5551 DNI 0402
63 VDD33_5
GND_SIGNAL5
R6645 10,DNI
R6646 10,DNI
V65 V66 SNS RSNS
Remote Sense Near FPGA Power balls
C1776 DNI 0402
R5558 1K 0402 1%
R5559 2.00K 0402
3V3_REG_SENSE_N
3V3_REG_SENSE_P
FB9 742792780 0402
5V0
C1777 2.2uF 0603
connect AGND to PGND through a single via
R5562 0
3.3V_REG
R5537 1K
POWER LED
D53 BLUE LED

3.3V_REG_INST
M10_3.3V
R6644 0

3.3V_REG_INST
3.3V_REG_INST
C2008 100uF 7343-V_low-profile
C2009 0.1uF 0402
C2010 0.1uF 0402
C2011 0.1uF 0402
R6074 DNI 0402
23,53 3.3V_REG_EN
R6075 2.2K 0402
U136
13 VIN
1 VIN
3 VCC
2 EN
4 GND
12 VOUT
11 VOUT
10 VOUT
9 VOUT
8 VOUT
7 BLEED
5 SR
6 PG
NCP45560IMNTWG-H
R6260 0
C58 DNI 0402
3.3V_REG_PG 23
3.3V_REG
R5728 DNI 0402
C2012 0.1uF 0402

Intel Corporation, 101 Innovation Dr., San Jose CA 95134
Copyright (c) 2016, Intel Corporation. All Rights Reserved.

Title: Stratix 10 DX FPGA DEVKIT Board

Size	Document Number	Rev
Custom	150-0330653-A (K49172-001)	A

Date: Friday, May 24, 2019 Sheet 63 of 69

Power - 2.4V VCCFUSE_PWRGD

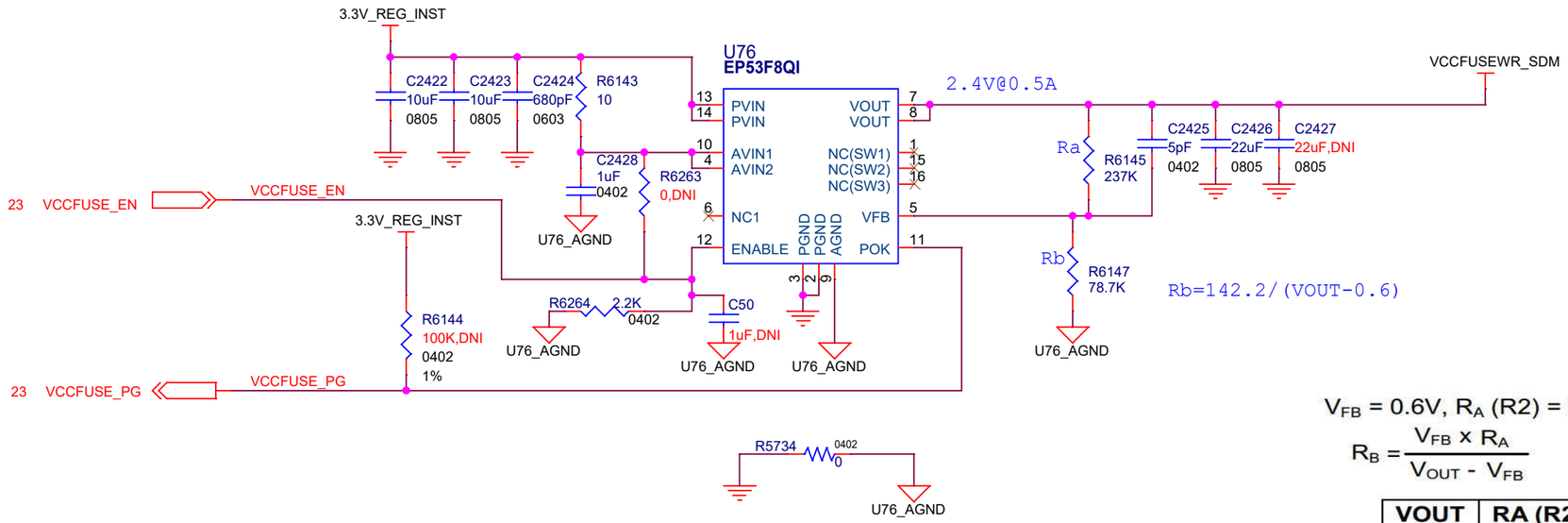

$$V_{FB} = 0.6V,\ R_A\ (R2) = 237k$$

$$R_B = \frac{V_{FB} \times R_A}{V_{OUT} - V_{FB}}$$

VOUT	RA (R2)	RB (R4)
1.0V	237k	357k
1.2V	237k	237k
1.5V	237k	158k
1.8V	237k	118k
2.5V	237k	75k
3.3V	237k	52.3k

Intel Corporation, 101 Innovation Dr., San Jose CA 95134
Copyright (c) 2016, Intel Corporation. All Rights Reserved.

Title: **Stratix 10 DX FPGA DEVKIT Board**

Size: B | Document Number: 150-0330653-A (K49172-001) | Rev: A

Date: Friday, May 24, 2019 | Sheet 64 of 69

Power - 2V5_DDR4, DDR4_VTT

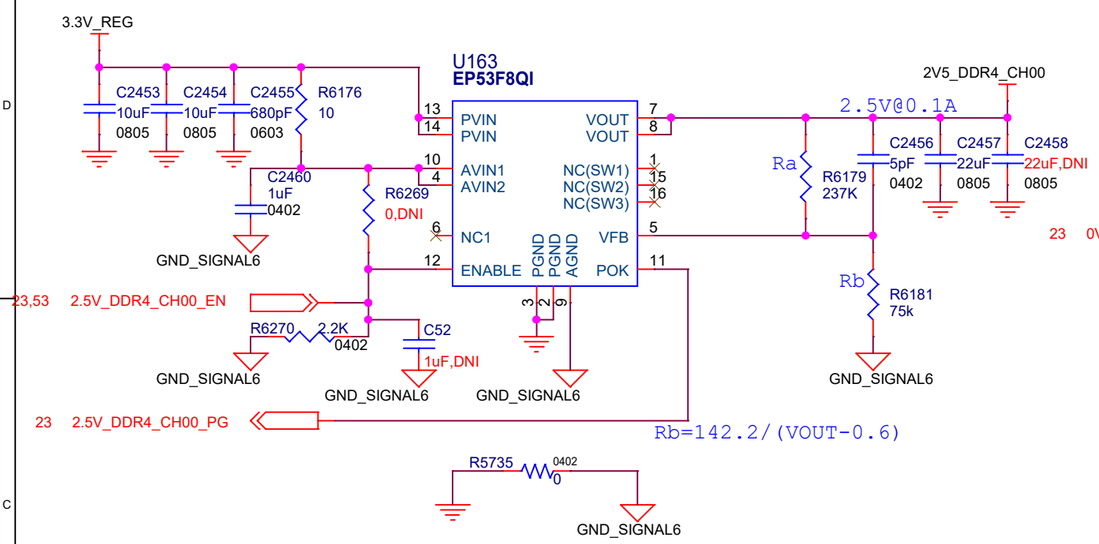

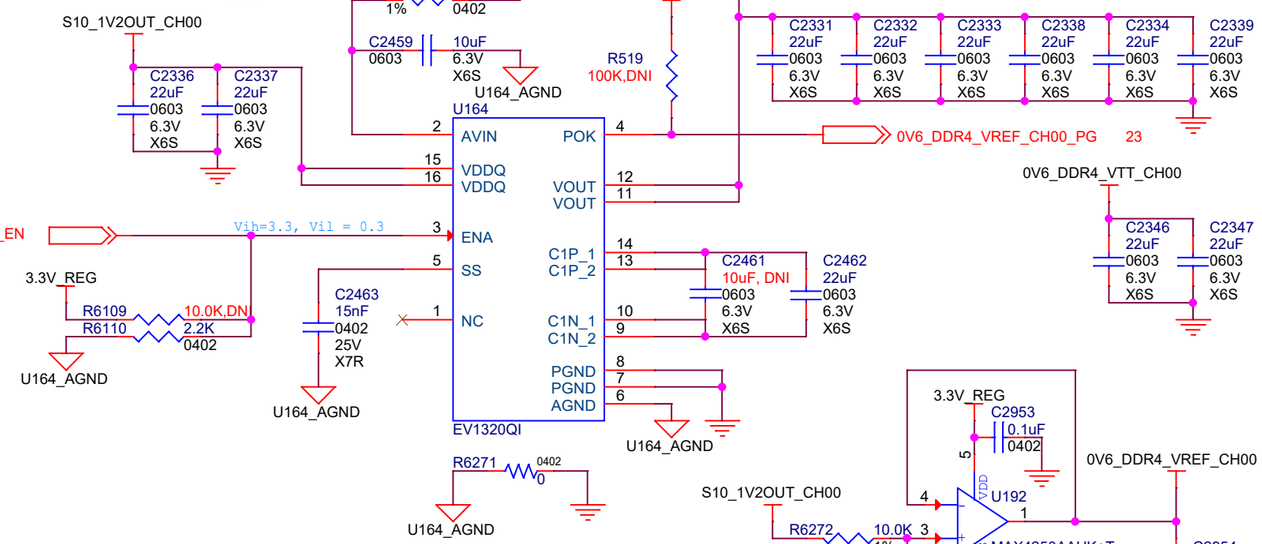

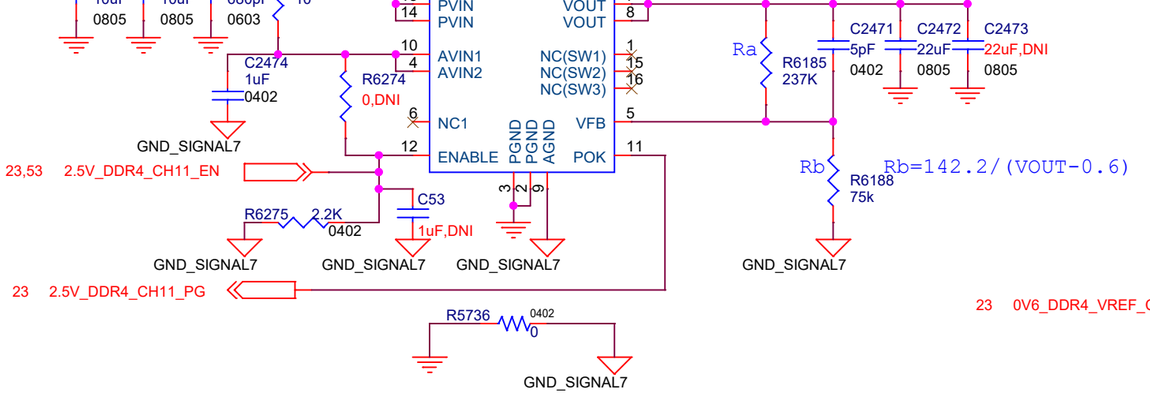

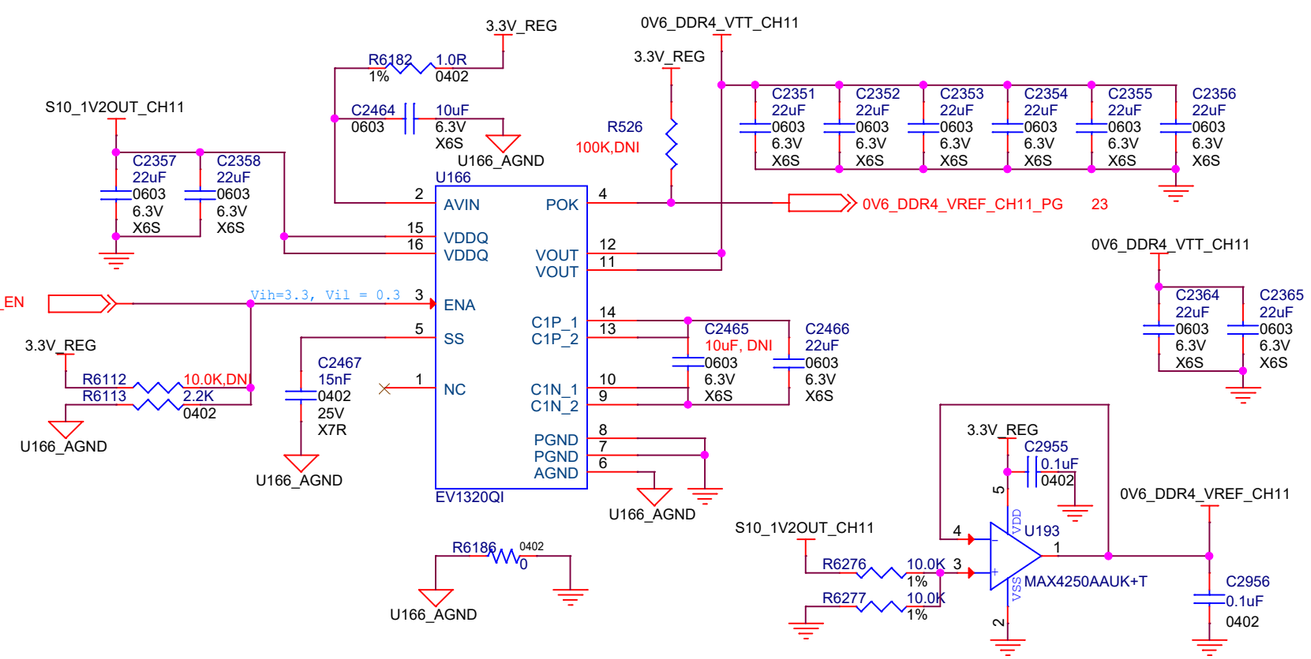

$$V_{FB} = 0.6V,\ R_A\ (R2) = 237k$$

$$R_B = \frac{V_{FB} \times R_A}{V_{OUT} - V_{FB}}$$

VOUT	RA (R2)	RB (R4)
1.0V	237k	357k
1.2V	237k	237k
1.5V	237k	158k
1.8V	237k	118k
2.5V	237k	75k
3.3V	237k	52.3k

Intel Corporation, 101 Innovation Dr., San Jose CA 95134
Copyright (c) 2016, Intel Corporation. All Rights Reserved.

Title: **Stratix 10 DX FPGA DEVKIT Board**

Size	Document Number	Rev
B	150-0330653-A (K49172-001)	A

Date: Friday, May 24, 2019 Sheet 65 of 69

Power-1V2_DDR4_CH11

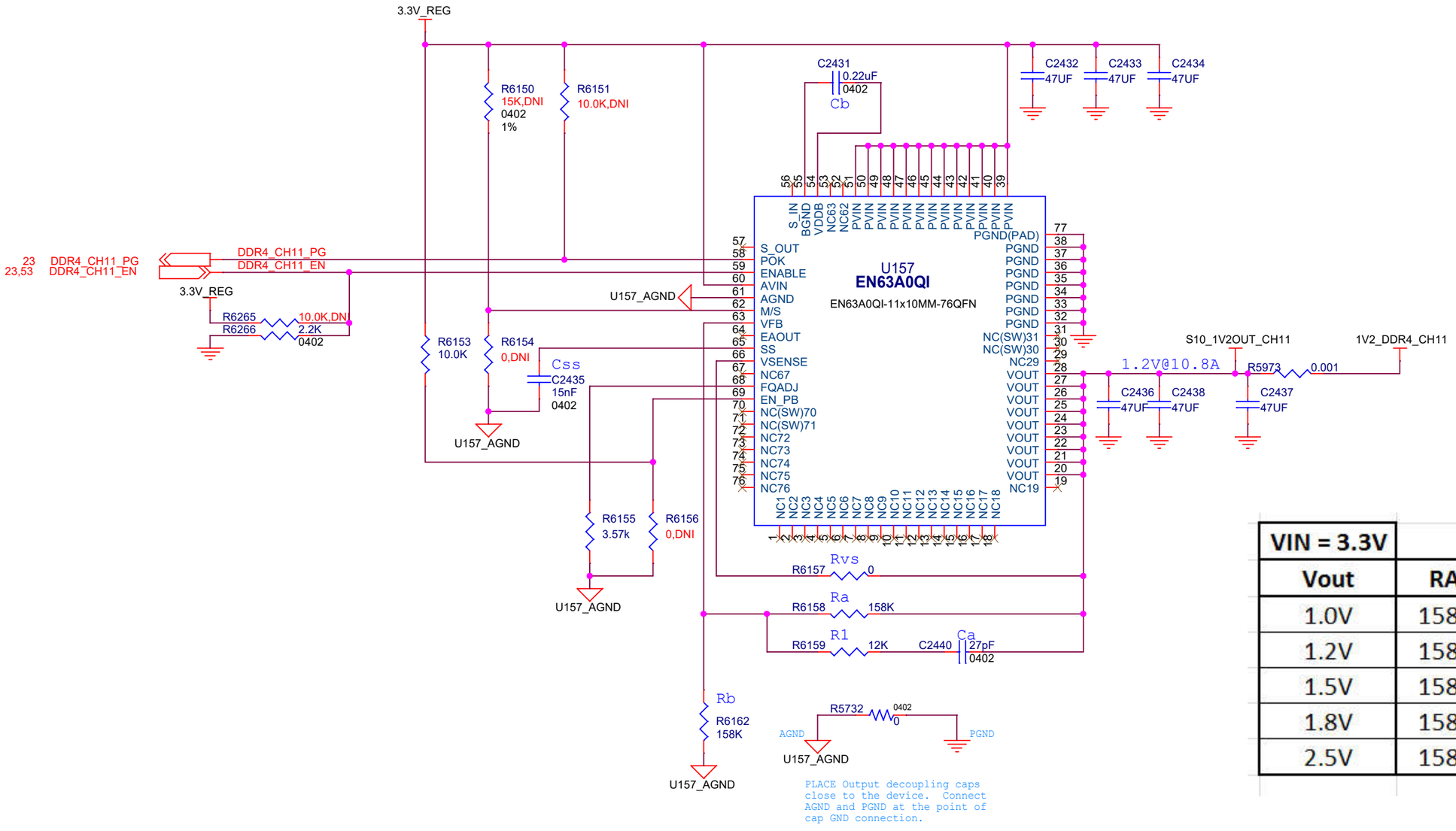

VIN = 3.3V				
Vout	**RA**	**RB**	**CA**	**R1**
1.0V	158k	237k	27pF	12k
1.2V	158k	158k	27pF	12k
1.5V	158k	105k	27pF	12k
1.8V	158k	78.7K	27pF	12k
2.5V	158k	49.9K	27pF	12k

Intel Corporation, 101 Innovation Dr., San Jose CA 95134
Copyright (c) 2016, Intel Corporation. All Rights Reserved.

Title: **Stratix 10 DX FPGA DEVKIT Board**

Size	Document Number	Rev
B	150-0330653-A (K49172-001)	A

Date: Friday, May 24, 2019 Sheet 66 of 69

Power-1V2_DDR4_CH11

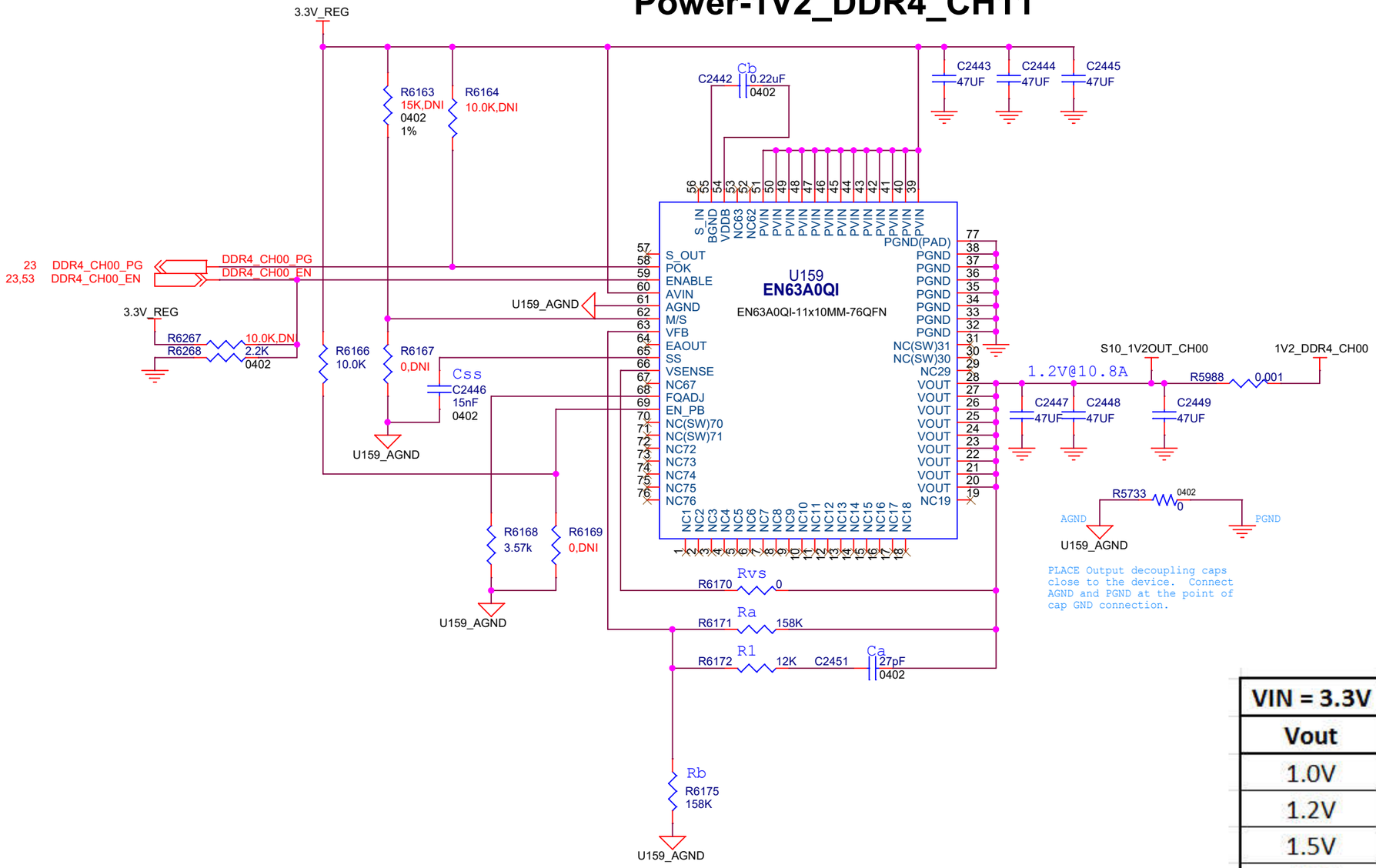

VIN = 3.3V				
Vout	**RA**	**RB**	**CA**	**R1**
1.0V	158k	237k	27pF	12k
1.2V	158k	158k	27pF	12k
1.5V	158k	105k	27pF	12k
1.8V	158k	78.7K	27pF	12k
2.5V	158k	49.9K	27pF	12k

Intel Corporation, 101 Innovation Dr., San Jose CA 95134
Copyright (c) 2016, Intel Corporation. All Rights Reserved.

Title: **Stratix 10 DX FPGA DEVKIT Board**

Size	Document Number	Rev
B	150-0330653-A (K49172-001)	A

Date: Friday, May 24, 2019 Sheet 67 of 69

Level Translators, IOexp

1) M10_2V5 power good
2) MAX10 configures itself from CFM
3) MAX10 Initiate Power Up Sequence
4) MAX 10 Release NCONFIG for S10 to configure from flash
5) MAX10 NIOS boot from Flash after S10 CONF_DONE

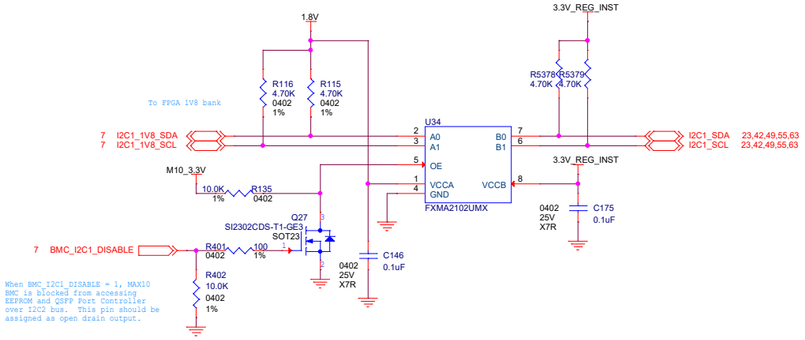

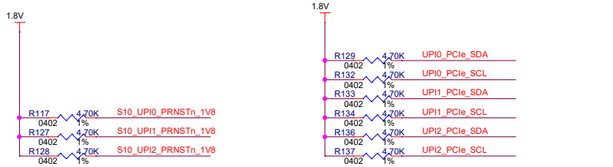

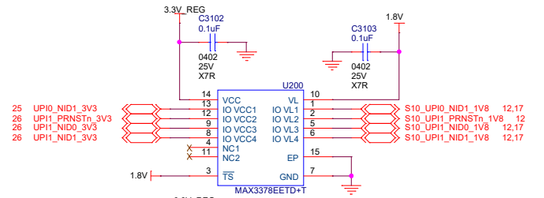

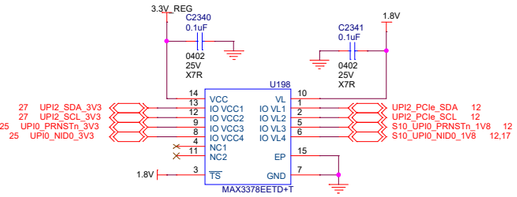

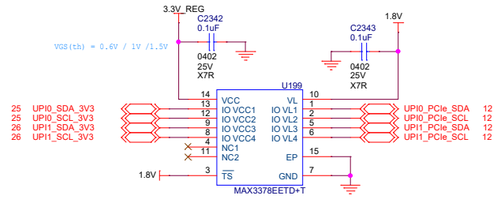

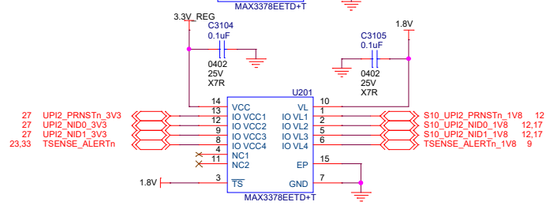

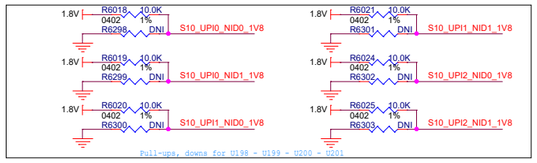

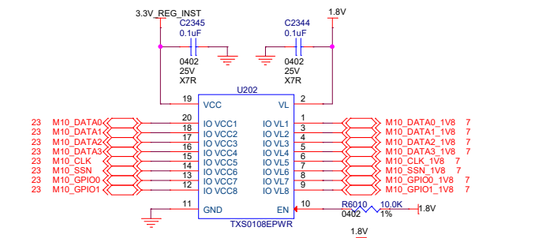

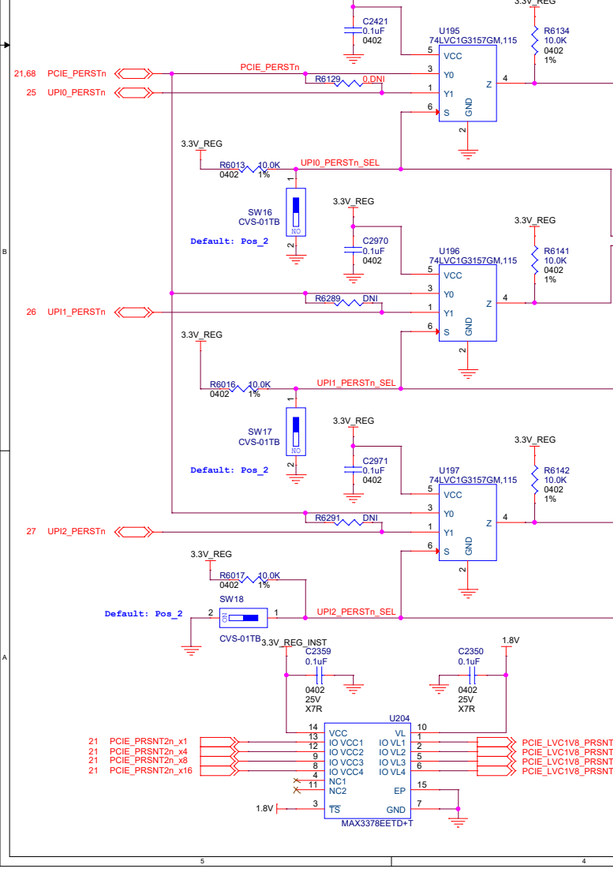

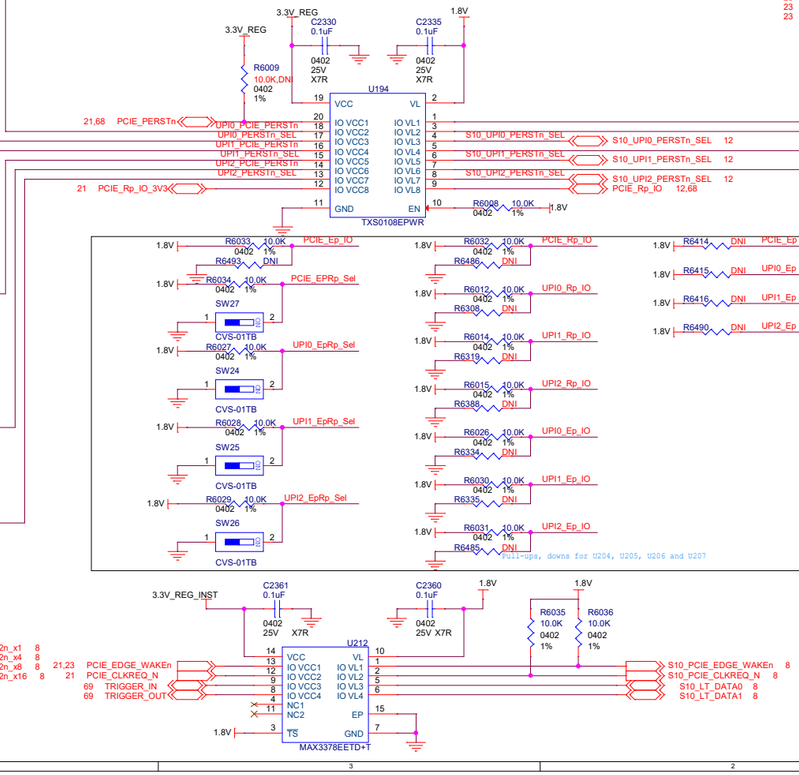

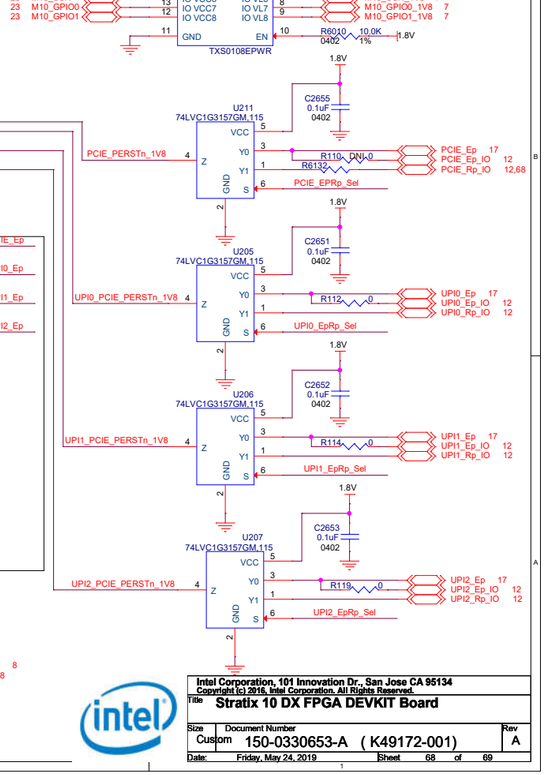

Intel Corporation, 101 Innovation Dr., San Jose CA 95134
Copyright (c) 2016, Intel Corporation. All Rights Reserved.

Title: Stratix 10 DX FPGA DEVKIT Board

Size	Document Number	Rev
Custom	150-0330653-A (K49172-001)	A

Date: Friday, May 24, 2019 Sheet 68 of 69

Level translator

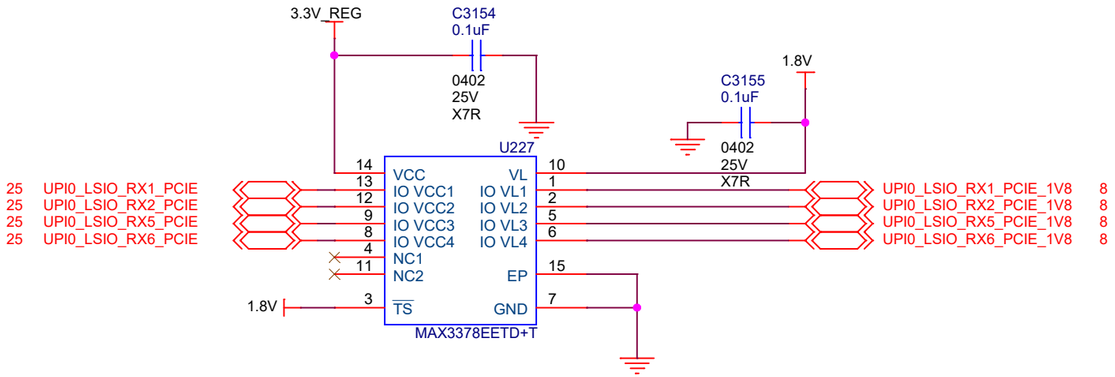

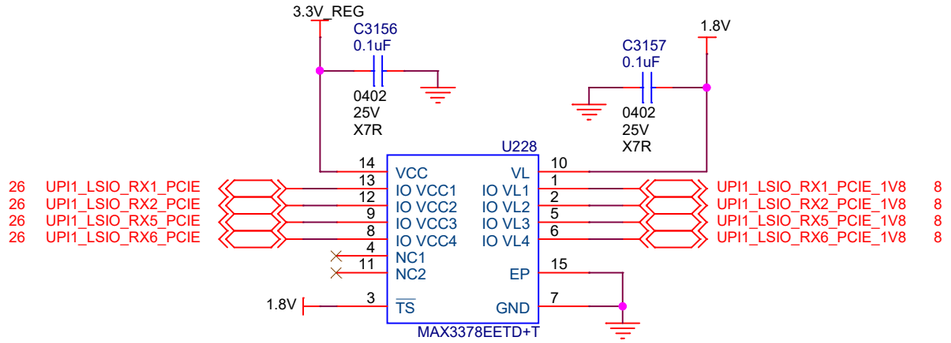

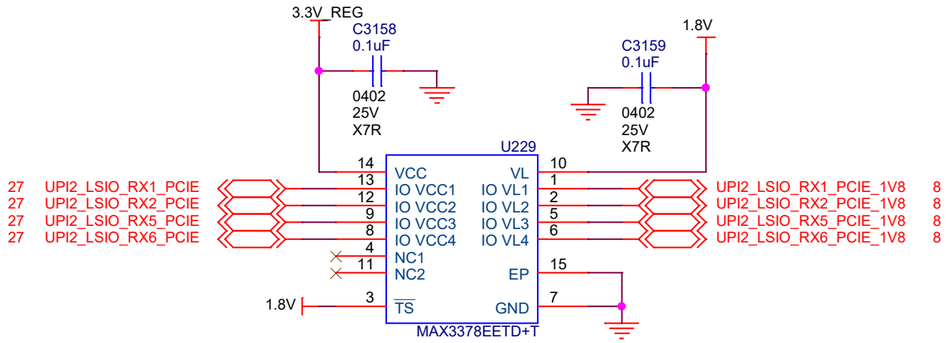

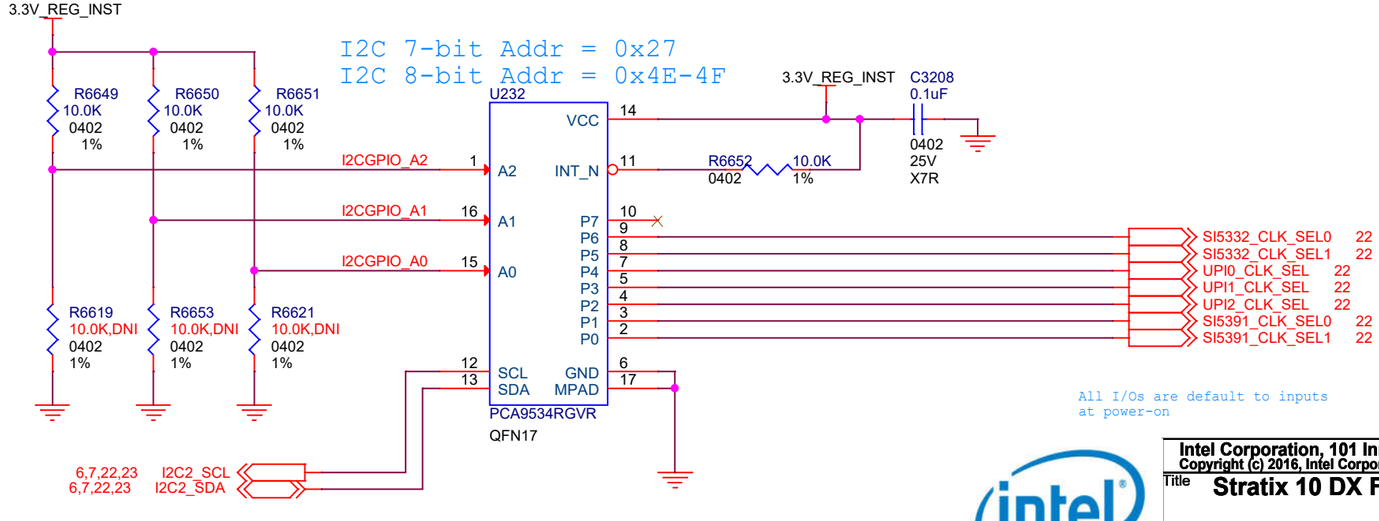

All I/Os are default to inputs at power-on

Intel Corporation, 101 Innovation Dr., San Jose CA 95134
Copyright (c) 2016, Intel Corporation. All Rights Reserved.

Title	Stratix 10 DX FPGA DEVKIT Board	
Size: B	Document Number: 150-0330653-A (K49172-001)	Rev: A
Date: Friday, May 24, 2019	Sheet 69 of 69	